AE2.1 Piping Exploded View

August 01, 2022

AE2.1 48 Tubs Piping View

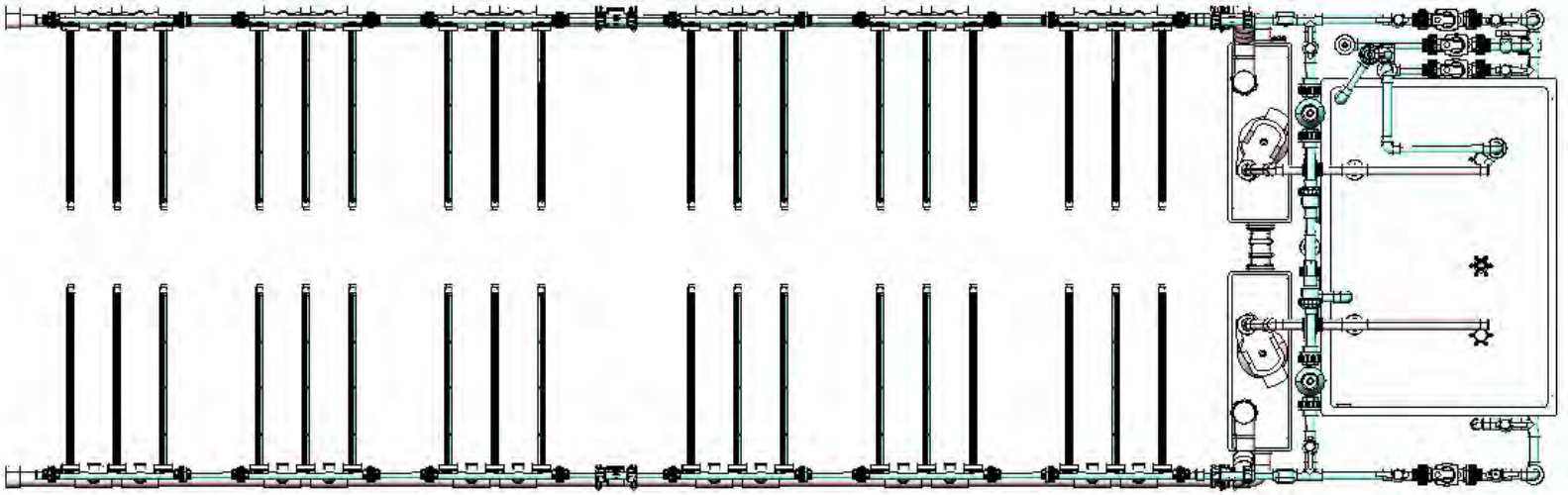

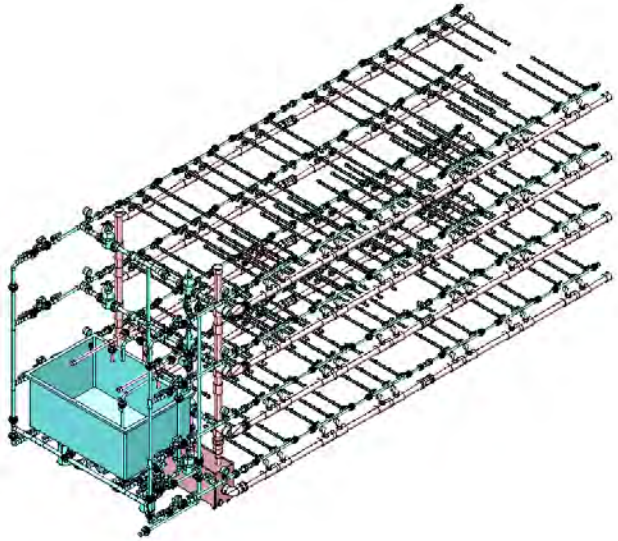

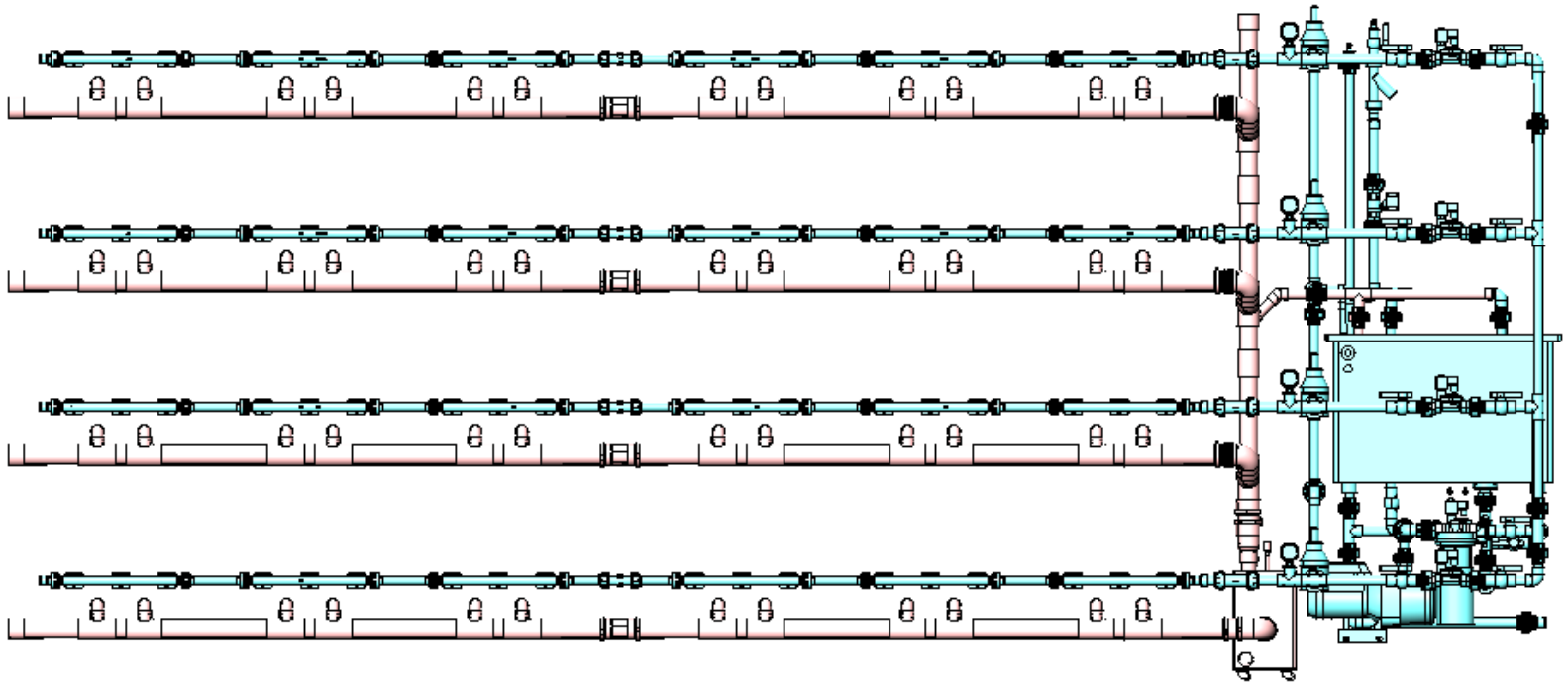

Irrigation pipe

Return water pipe

AE2.1 Irrigation pipe

Sign	Description
A	Section and connection
B	ADU Pipe
C	Pump Module

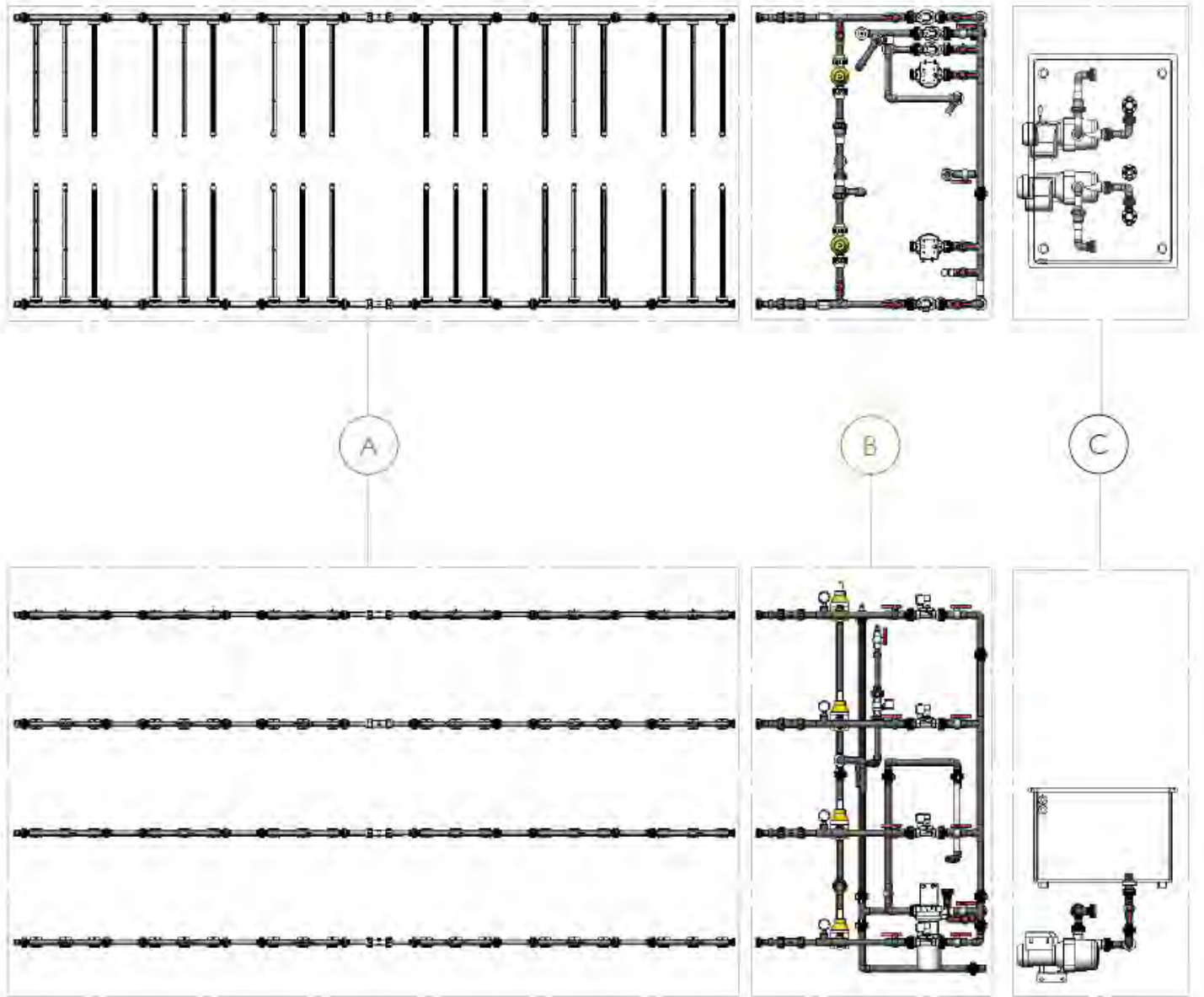

AE2.1 Irrigation pipe – Section

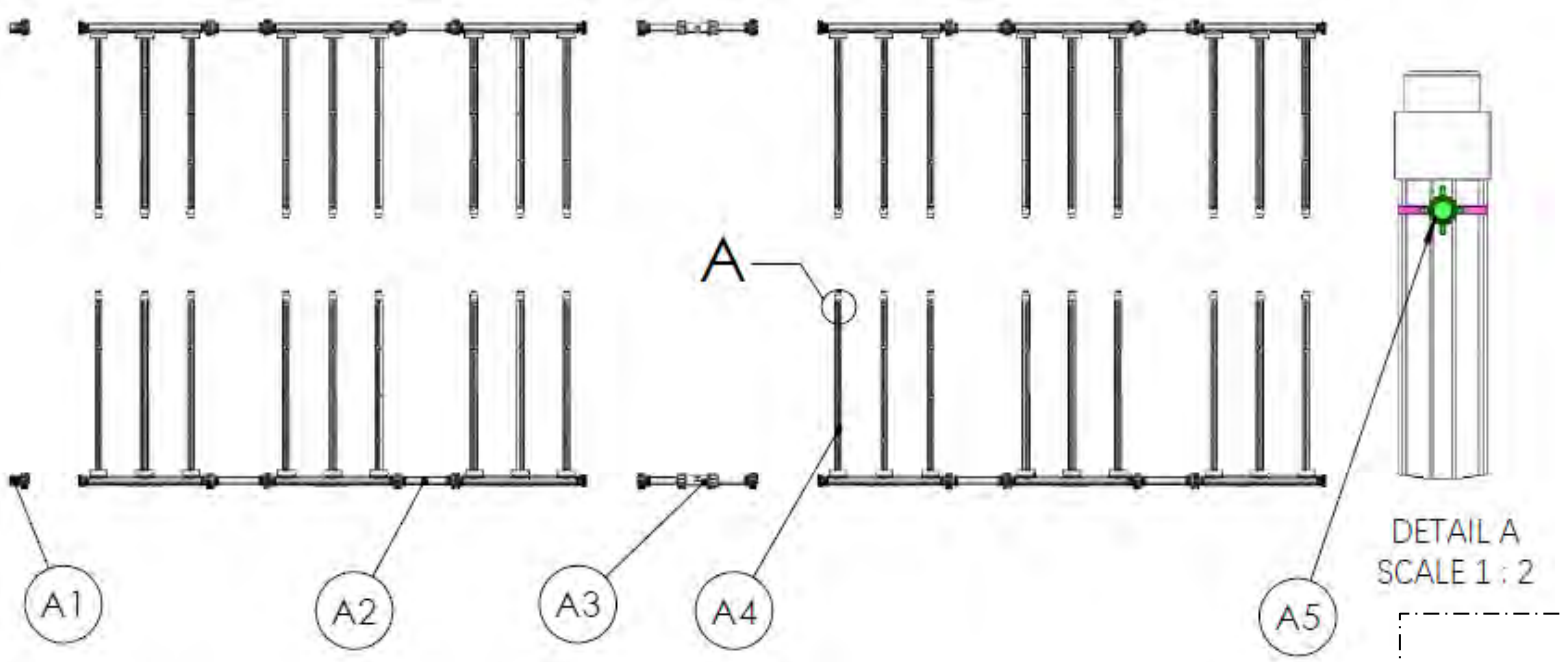

Item	PN
A1	310-06012-01
A2	310-06010-01
A3	310-06011-01
A4	310-06009-01
A5	371-10001-01



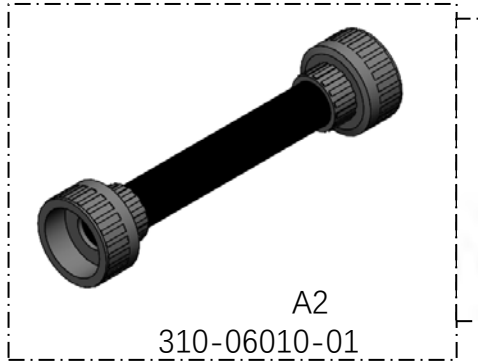

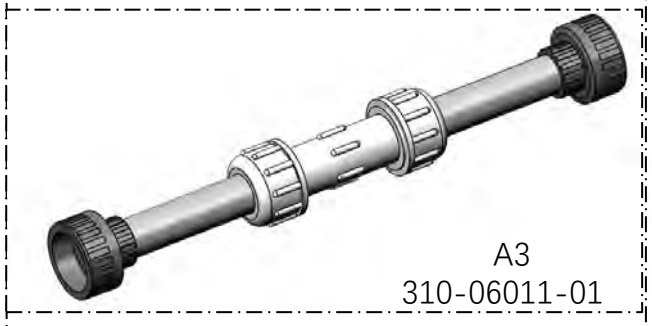

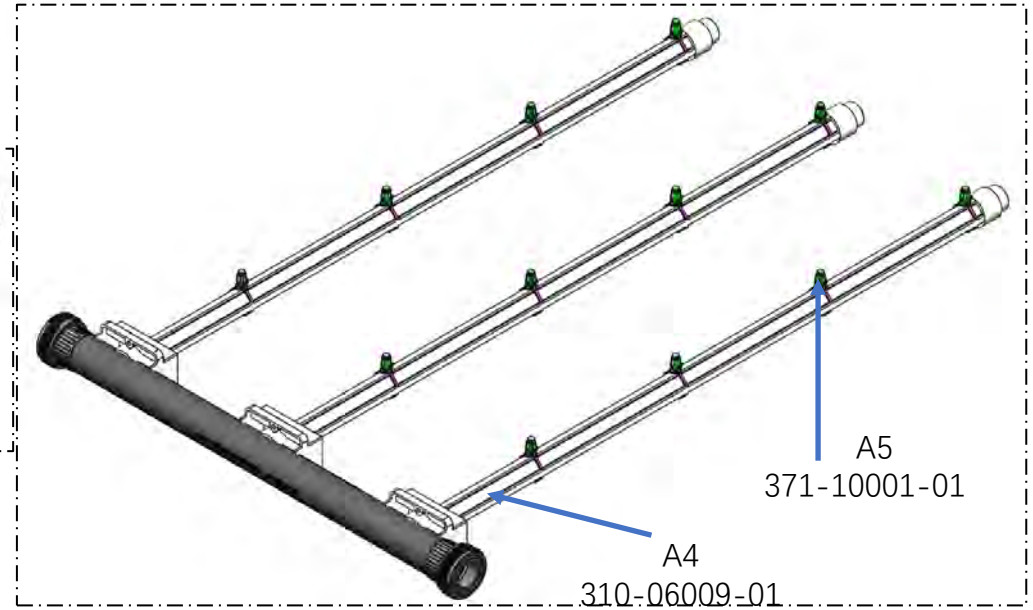

AE2.1 Irrigation pipe-ADU Pipe

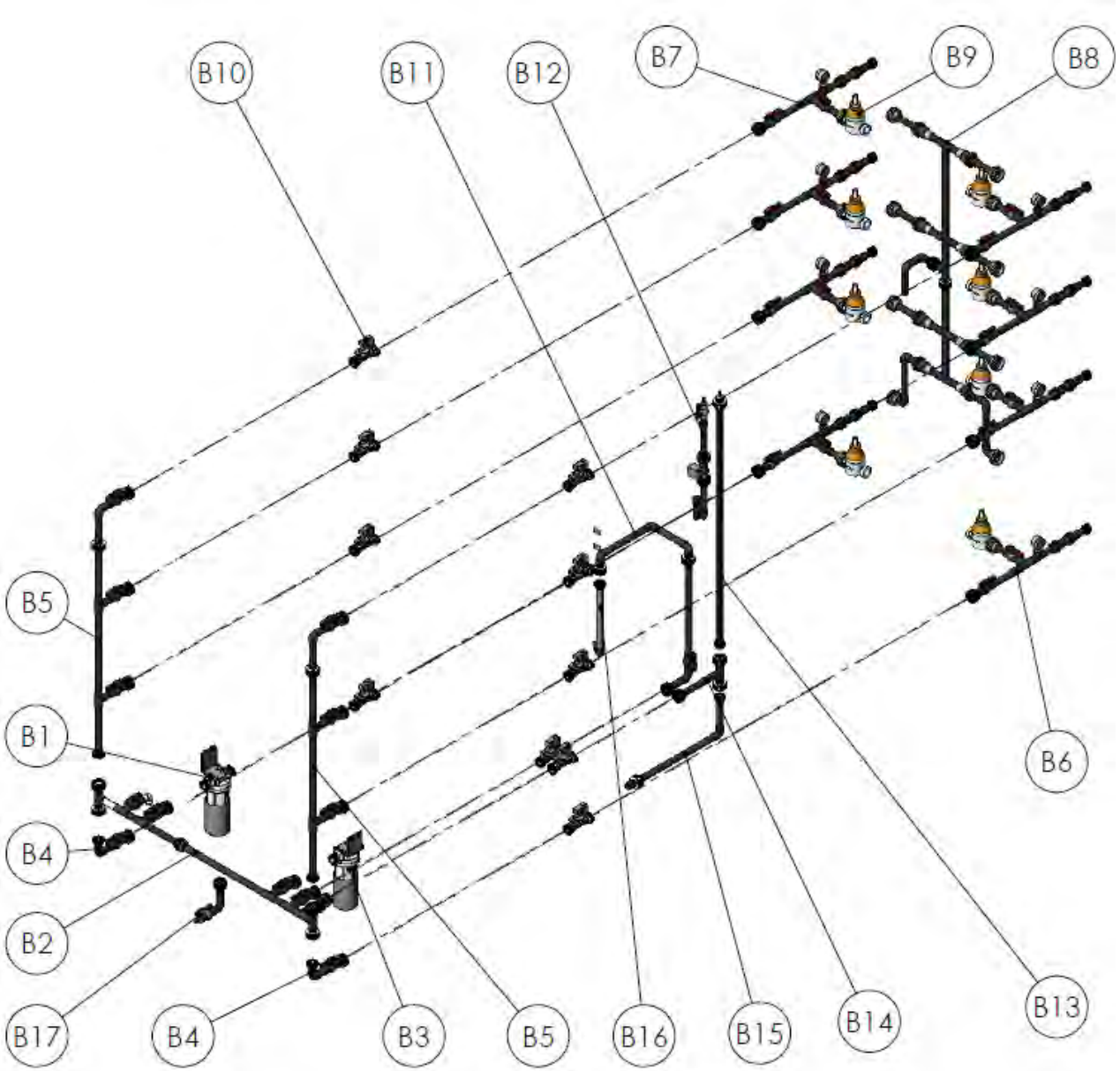

Item	PN
B1	Filter housing 373-10034-01
B2	310-10074-01
B3	Filter housing 373-10034-01
B4	310-10075-01
B5	310-10073-01
B6	310-10080-01
B7	310-10079-01
B8	310-10081-01
B9	363-06028-01
B10	310-10058-01
B11	310-10076-01
B12	310-10176-01
B13	310-10088-01
B14	310-10078-01
B15	310-10089-01
B16	310-10056-01
B17	310-10060-01

AE2.1 Irrigation pipe-ADU Pipe

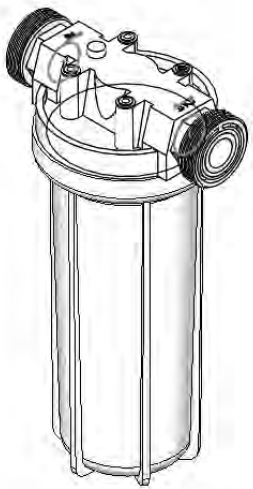

B1 & B3 Filter housing
373-10034-01

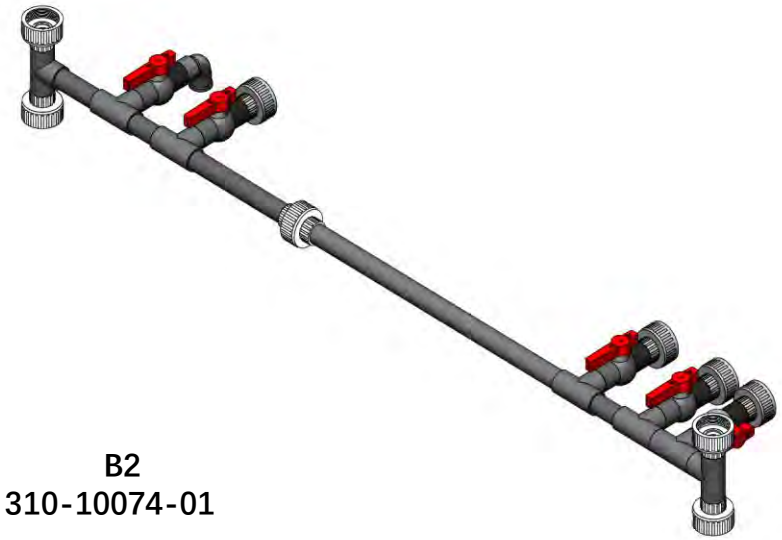

B2
310-10074-01

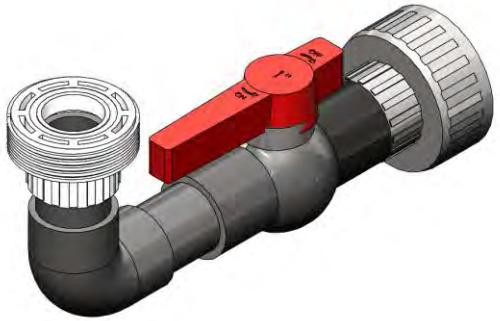

B4
310-10075-01

Item	PN
B1	Filter housing 373-10034-01
B2	310-10074-01
B3	Filter housing 373-10034-01
B4	310-10075-01
B5	310-10073-01
B6	310-10080-01

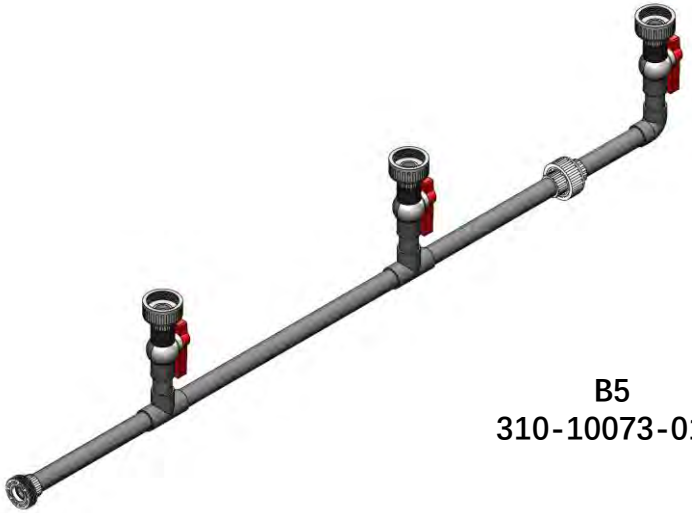

B5
310-10073-01

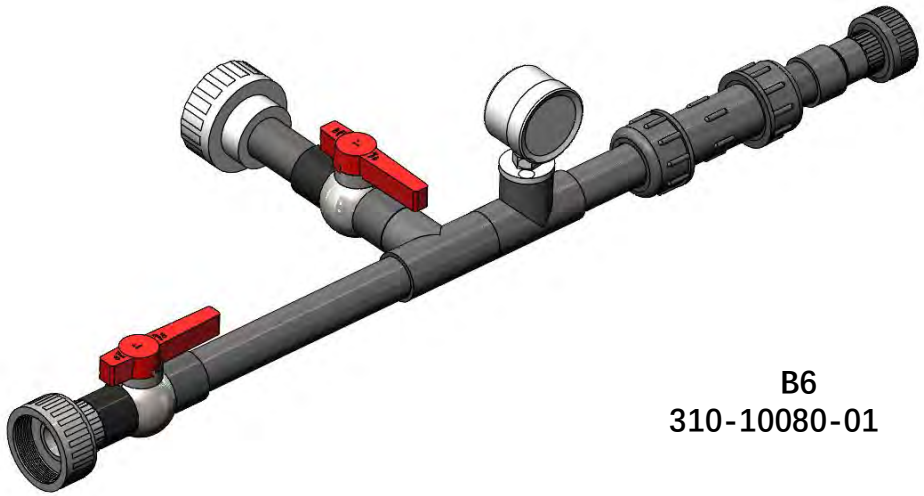

B6
310-10080-01

AE2.1 Irrigation pipe-ADU Pipe

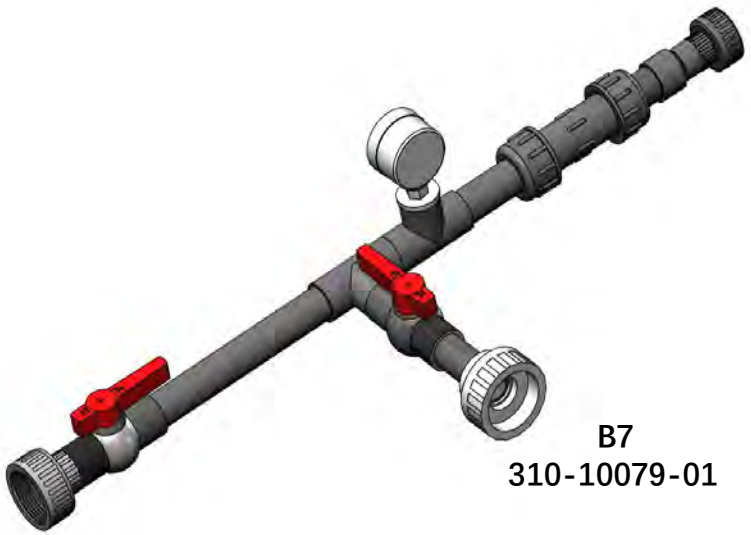

B7
310-10079-01

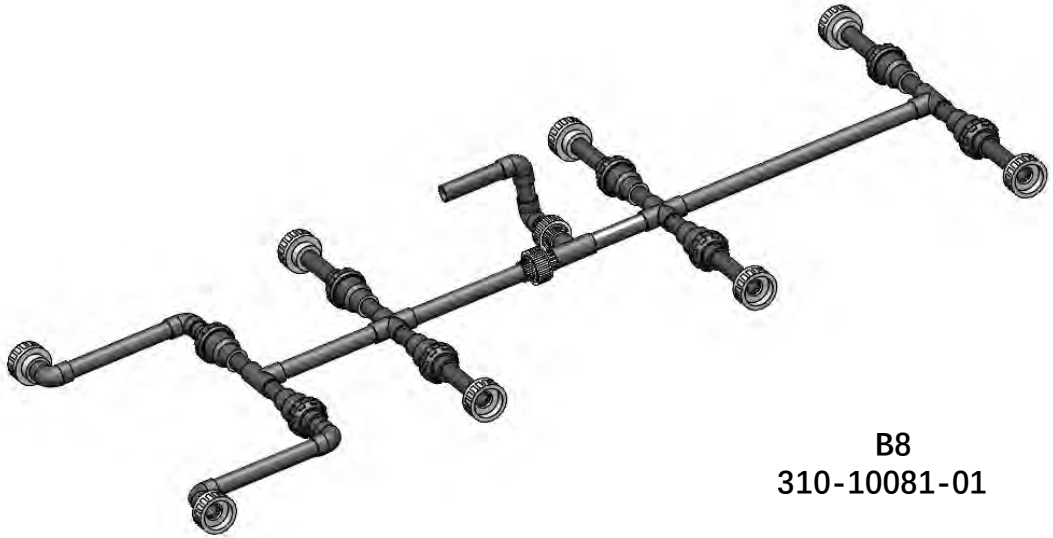

B8
310-10081-01

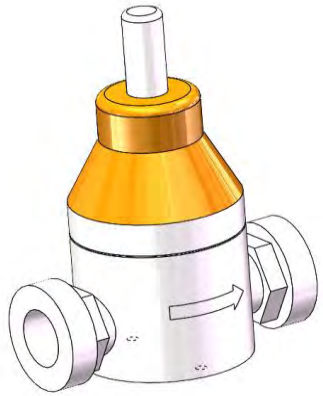

B9
363-06028-01

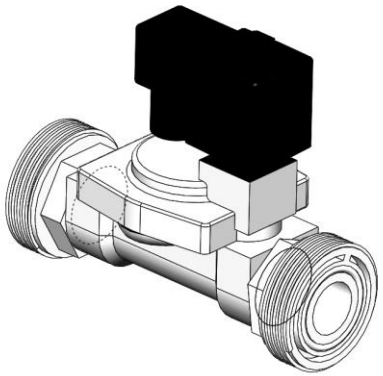

B10
310-10058-01



B11
310-10076-01



B12
310-10176-01



B13
310-10088-01

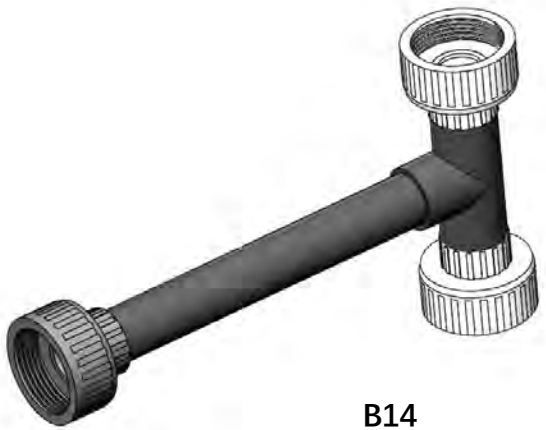

B14
310-10078-01

Item	PN
B7	310-10079-01
B8	310-10081-01
B9	363-06028-01
B10	310-10058-01
B11	310-10076-01
B12	310-10176-01
B13	310-10088-01
B14	310-10078-01

ÆssenseGrows

AE2.1 Irrigation pipe-ADU Pipe

Item	PN
B15	310-10089-01
B16	310-10056-01
B17	310-10060-01



B15
310-10089-01

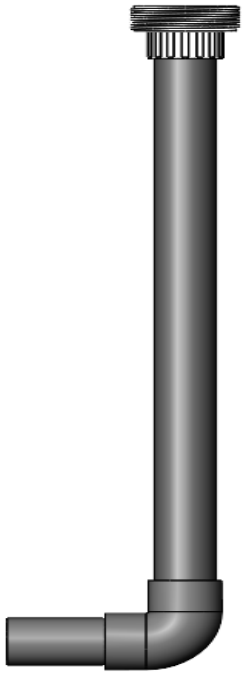

B16
310-10056-01



B17
310-10060-01

AE2.1 Irrigation pipe –Pump Module UL （310-60017-01 220VAC60Hz)

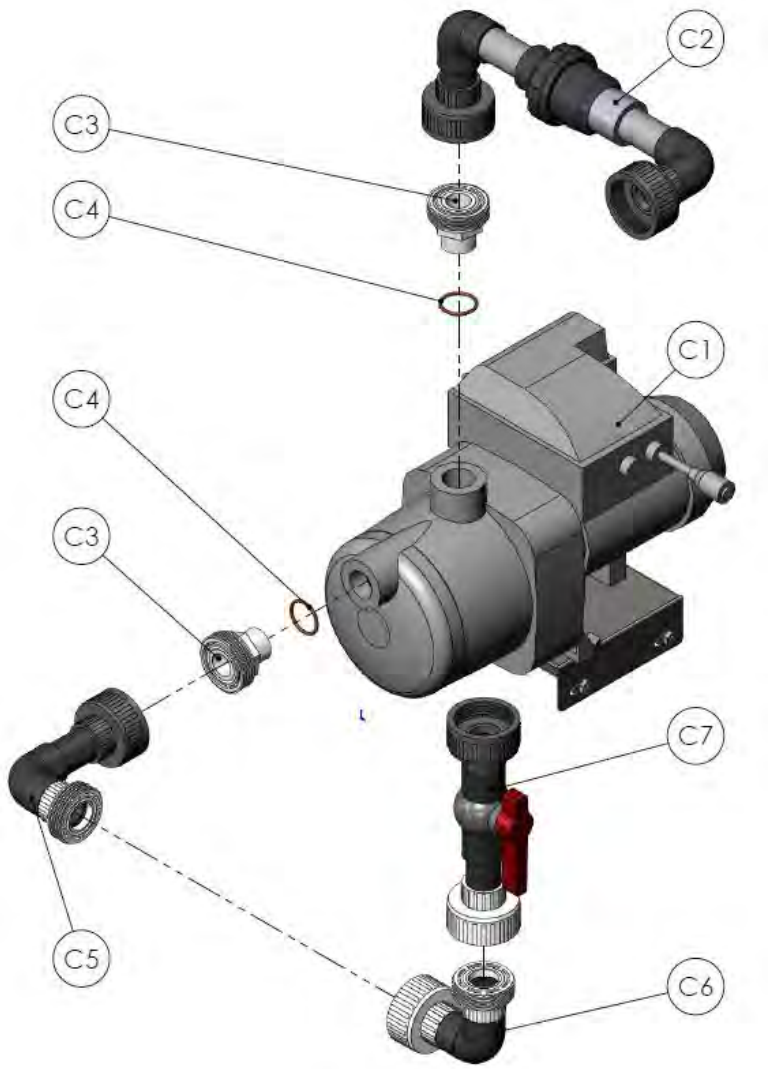

Pump DAB EURCOM 25/806
(For North America)

Item	PN
C1	391-00017-01
C2	310-10135-01
C3	363-06021-01
C4	337-51004-01
C5	310-10134-01
C6	310-10071-01
C7	310-10136-01

AE2.1 Irrigation pipe –Pump Module (310-10110-01 220VAC 50Hz)

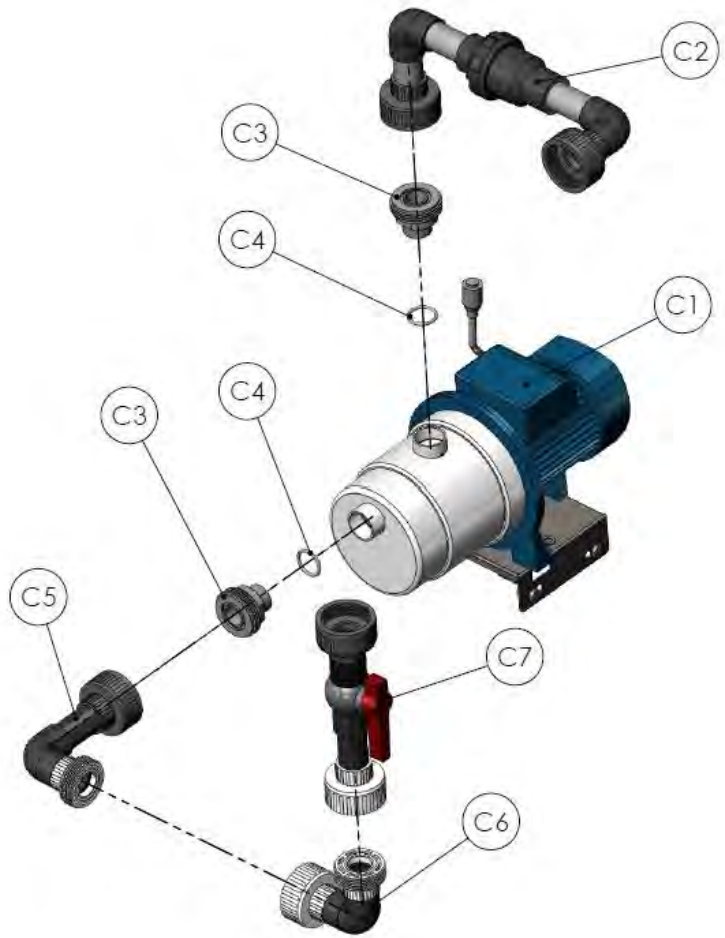

Pump Pedrollo,PLURIJETm 3/100-N 220V 50Hz 550W
(For EMEA)

Item	PN
C1	391-70005-01
C2	310-10069-01
C3	363-06021-01
C4	337-51004-01
C5	310-10070-01
C6	310-10071-01
C7	310-10061-01

AE2.1 Return water pipe

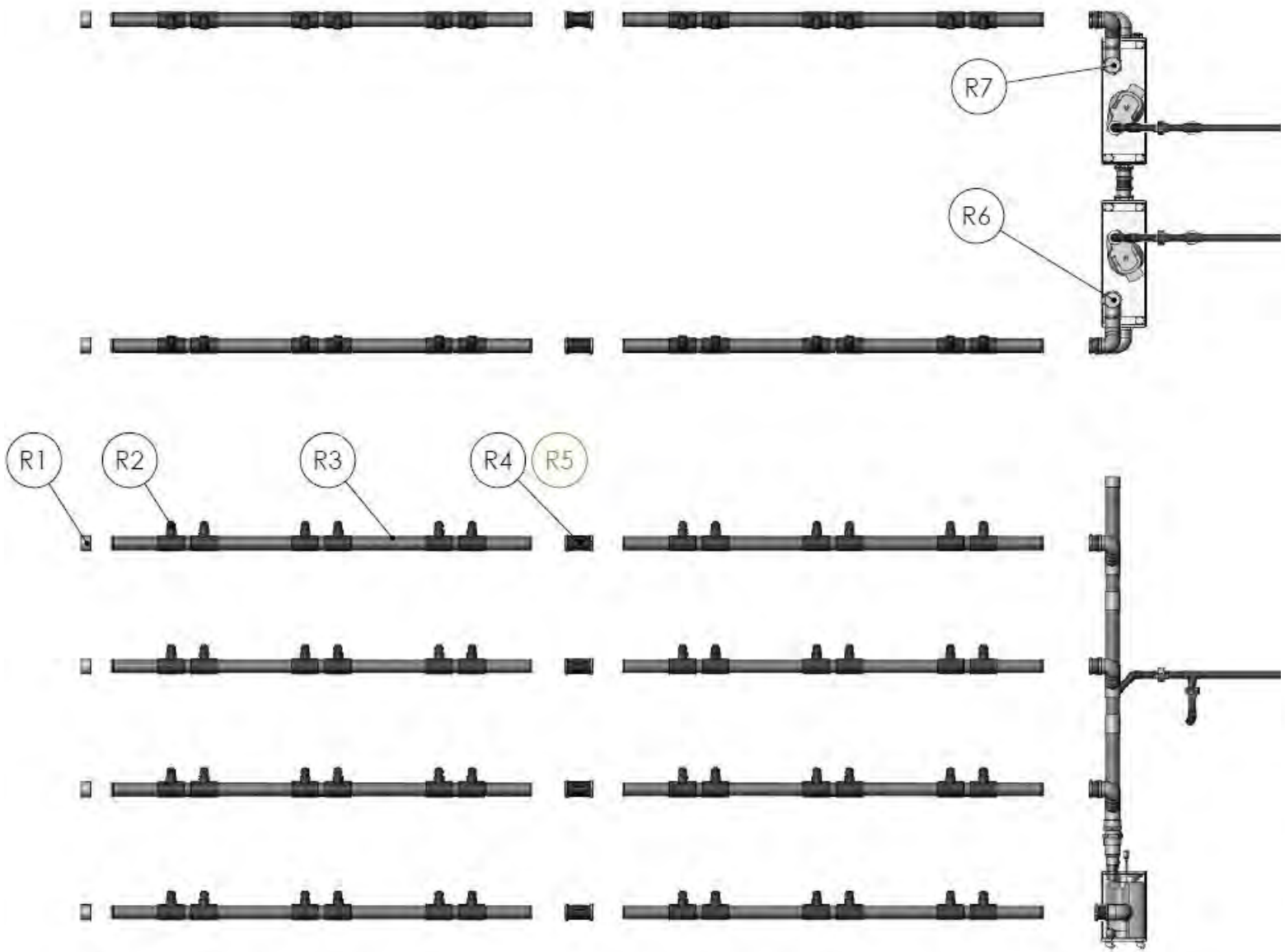

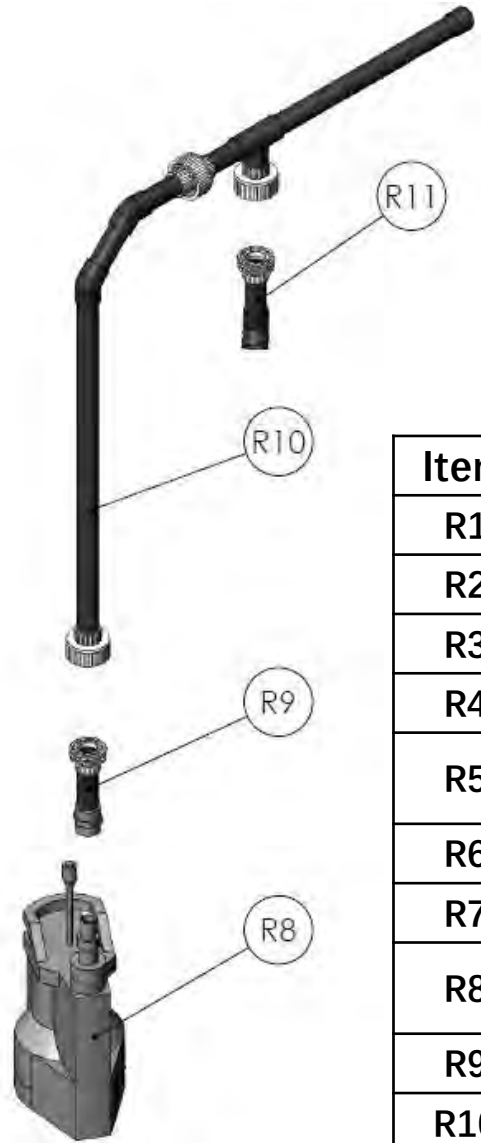

Item	PN
R1	363-08003-01
R2	337-90035-01
R3	310-10084-01
R4	363-08009-01
R5	322-90019-01 **(Hose Clamp)**
R6	310-10132-01
R7	310-10133-01
R8	300-00217-01 **(UL Pump ASSY)**
R9	310-10270-01
R10	310-10268-01
R11	310-10170-01

AE2.1 Return water pipe



363-08003-01



337-90035-01

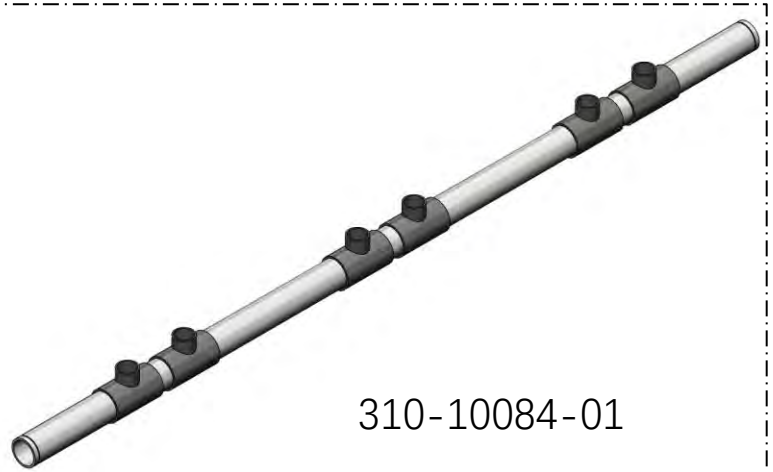

310-10084-01



363-08009-01

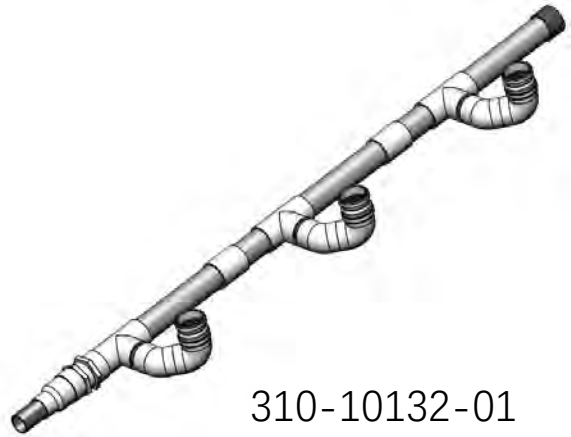

310-10132-01

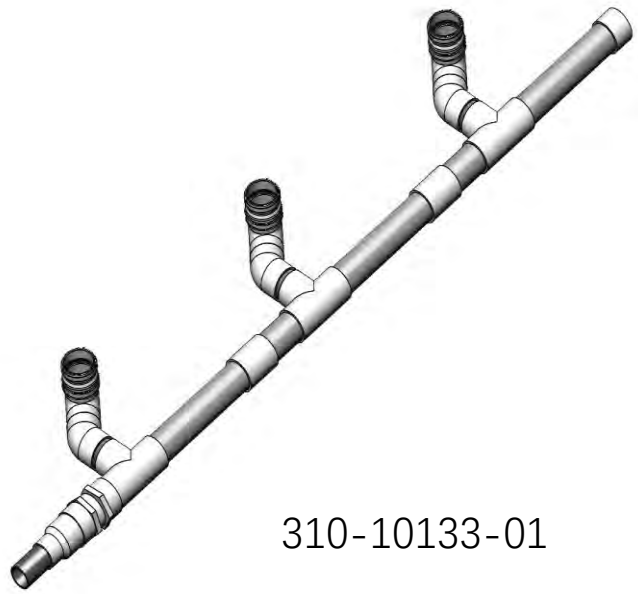

310-10133-01

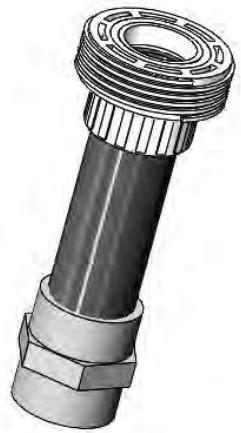

310-10270-01



310-10268-01



310-10170-01

Item	PN
R1	363-08003-01
R2	337-90035-01
R3	310-10084-01
R4	363-08009-01
R5	322-90019-01 **(Hose Clamp)**
R6	310-10132-01
R7	310-10133-01
R8	300-00217-01 **(UL Pump ASSY)**
R9	310-10270-01
R10	310-10268-01
R11	310-10170-01

A 2996 Scott Blvd.
Santa Clara, CA 95054

P 1.650.564.3058

E info@aessensegrows.com