AEtrium System User Group Meeting

11/18/2022

Agenda

1. Sign in/light breakfast: 8:30-9:00
2. Introductions: 9:00-9:30
    - Chris Wrenn (VP Americas Sales, meeting moderator) welcome
    - Bob Chen (CEO/President): opening remarks
    - AEssense Support Team introductions
3. User introductions: 9:30-10:30
    - Company size, how many tubs/lights
    - Personal history, Industry history
    - How are you doing? Harvests/year, Yield/tub, $/lb
4. “Cleanliness is Next to Godliness” Cleaning and sanitation discussion:10:30-11:30
    - Cleanliness overview
    - AEtrium-2.1 cleaning specifics
    - AEtrium-4 cleaning specifics
        - Harvest Procedures
5. The road to cloning success in the AEtrium-2.1: 11:30-12:00
6. Working Lunch:12:00-1:00
7. AEtrium System Coming Upgrades: 12:00-12:30
    - Software
    - Hardware
    - User recommended upgrades
8. Blooming Success in the AEtrium: 12:30-1:00
    - Nutrients
    - Root health
    - Canopy management
9. Environmental controls: 1:00-1:30
    - Operational targets
    - Challenges
    - Preferred vendors
10. Closing: 1:30-2:00
    - AEssense comments
    - User comments

FOR AESSENSE INTERNAL USE ONLY

Agenda

1. Sign in/light breakfast: 8:30-9:00
2. Introductions: 9:00-9:30
   - Chris Wrenn (VP Americas Sales, meeting moderator) welcome
   - Bob Chen (CEO/President): opening remarks
   - AEssense Support Team introductions
3. User introductions: 9:30-10:30
   - Company size, how many tubs/lights
   - Personal history, Industry history
   - How are you doing? Harvests/year, Yield/tub, $/lb
4. “Cleanliness is Next to Godliness” Cleaning and sanitation discussion:10:30-11:30
   - Cleanliness overview
   - AEtrium-2.1 cleaning specifics
   - AEtrium-4 cleaning specifics
     - Harvest Procedures
5. The road to cloning success in the AEtrium-2.1: 11:30-12:00
6. Working Lunch:12:00-1:00
7. AEtrium System Coming Upgrades: 12:00-12:30
   - Software
   - Hardware
   - User recommended upgrades
8. Blooming Success in the AEtrium: 12:30-1:00
   - Nutrients
   - Root health
   - Canopy management
9. Environmental controls: 1:00-1:30
   - Operational targets
   - Challenges
   - Preferred vendors
10. Closing: 1:30-2:00
    - AEssense comments
    - User comments

FOR AESSENSE INTERNAL USE ONLY

The AEssense Team in Attendance

- Robert Chen, CEO
- Jennifer Ong, EVP
- Phil Gibson, VP Marketing
- Chris Wrenn, VP America’s Sales
- Wenpeng Hsueh, VP Service & Quality
- Hong Zhang, Director Engineering
- Sam Farrow, Plant Scientist
- Allen Li, Marketing

FOR AESSENSE INTERNAL USE ONLY

Agenda

1. Sign in/light breakfast: 8:30-9:00
2. Introductions: 9:00-9:30
   - Chris Wrenn (VP Americas Sales, meeting moderator) welcome
   - Bob Chen (CEO/President): opening remarks
   - AEssense Support Team introductions
3. User introductions: 9:30-10:30
   - Company size, how many tubs/lights
   - Personal history, Industry history
   - How are you doing? Harvests/year, Yield/tub, $/lb
4. "Cleanliness is Next to Godliness" Cleaning and sanitation discussion:10:30-11:30
   - Cleanliness overview
   - AEtrium-2.1 cleaning specifics
   - AEtrium-4 cleaning specifics
     - Harvest Procedures
5. The road to cloning success in the AEtrium-2.1: 11:30-12:00
6. Working Lunch:12:00-1:00
7. AEtrium System Coming Upgrades: 12:00-12:30
   - Software
   - Hardware
   - User recommended upgrades
8. Blooming Success in the AEtrium: 12:30-1:00
   - Nutrients
   - Root health
   - Canopy management
9. Environmental controls: 1:00-1:30
   - Operational targets
   - Challenges
   - Preferred vendors
10. Closing: 1:30-2:00
    - AEssense comments
    - User comments

FOR AESSENSE INTERNAL USE ONLY

Agenda

1. Sign in/light breakfast: 8:30-9:00
2. Introductions: 9:00-9:30
    - Chris Wrenn (VP Americas Sales, meeting moderator) welcome
    - Bob Chen (CEO/President): opening remarks
    - AEssense Support Team introductions
3. User introductions: 9:30-10:30
    - Company size, how many tubs/lights
    - Personal history, Industry history
    - How are you doing? Harvests/year, Yield/tub, $/lb
4. “Cleanliness is Next to Godliness” Cleaning and sanitation discussion:10:30-11:30
    - Cleanliness overview
    - AEtrium-2.1 cleaning specifics
    - AEtrium-4 cleaning specifics
        - Harvest Procedures
5. The road to cloning success in the AEtrium-2.1: 11:30-12:00
6. Working Lunch:12:00-1:00
7. AEtrium System Coming Upgrades: 12:00-12:30
    - Software
    - Hardware
    - User recommended upgrades
8. Blooming Success in the AEtrium: 12:30-1:00
    - Nutrients
    - Root health
    - Canopy management
9. Environmental controls: 1:00-1:30
    - Operational targets
    - Challenges
    - Preferred vendors
10. Closing: 1:30-2:00
    - AEssense comments
    - User comments

FOR AESSENSE INTERNAL USE ONLY

A Formula 1 Race Car

- The AEtrium System uses aeroponics which is metaphorically speaking the formula 1 race car of cultivation
- A formula 1 race car is indisputably the fastest way around a race track and aeroponics can produce the highest grams/square foot/year of superior grade cannabis
- Both are similar in that they both require that great detail be paid to the inputs.
  - A formula 1 race car doesn't use regular gas, it uses race fuel
  - We can't even put air in the tires of a formula 1 race car, instead we must use nitrogen
- With aeroponics we must pay closer attention to the details in order to be successful
  - We can put regular gas and air in the tires of a Camry and get around a race course, but we will never win using this strategy.



FOR AESSENSE INTERNAL USE ONLY

Cleanliness is Next to Godliness

- While said by millions of mothers this statement was originally said by John Wesley, the founder of Methodism, in a sermon in 1778
- Recognizing this, we have listened to our grow partners and have come up with some proposed improvements to the AEtrium System to make is easier to clean and to help to keep it clean
- Pressure washer attachments have proven very helpful to clean the AEtrium System
- Foamers are being used too

FOR AESSENSE INTERNAL USE ONLY

High pressure sewer ejector Kit



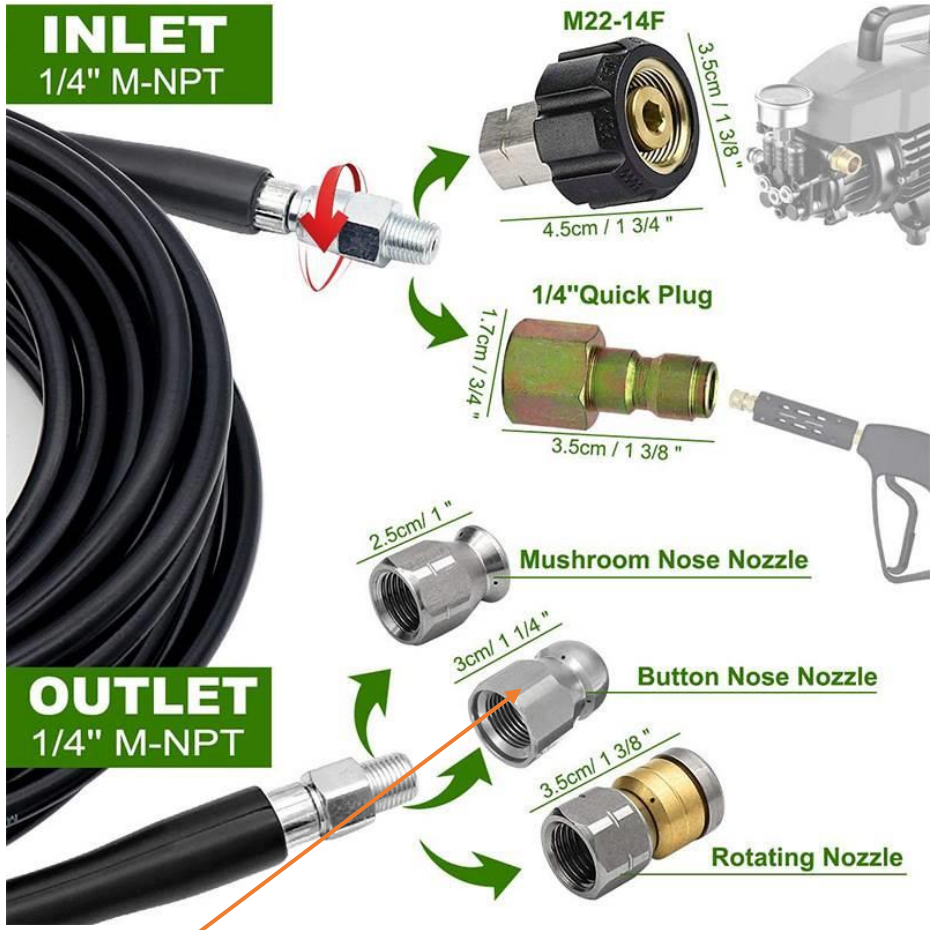

Use the nozzle

High pressure sewer ejector Kit



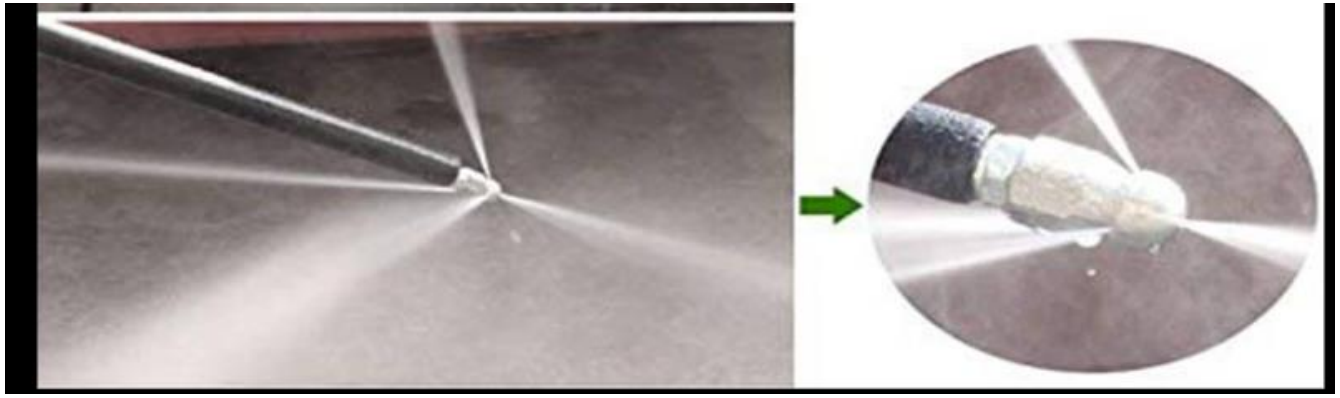

- $37+ from Amazon (pressure washer not included)
- There are two kinds of hose: 15 meters and 30 meters; Pressure up to 5800Psi

AEtrium 2.1 Proposed Upgrades to Facilitate Easier Cleaning

FOR AESSENSE INTERNAL USE ONLY

A2.1 Manifolds

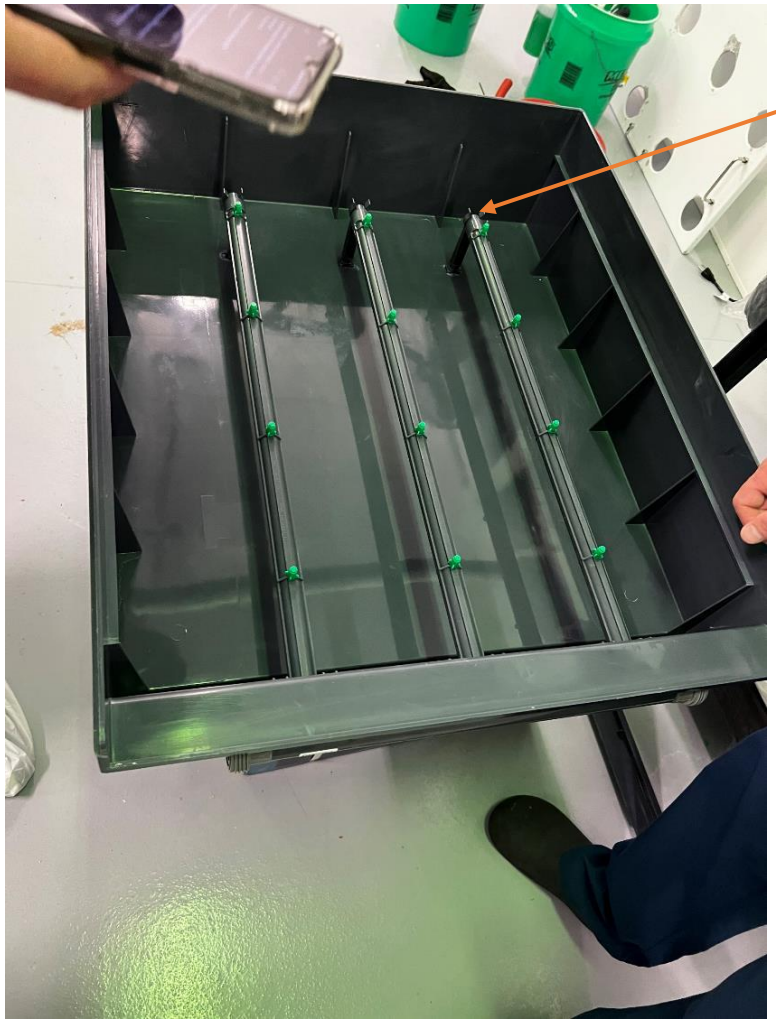

Customers have asked for end caps for the A2.1 manifolds to allow better cleaning



Customer uses this 2” diameter brush to clean up manifold pipes

Manifold End cap



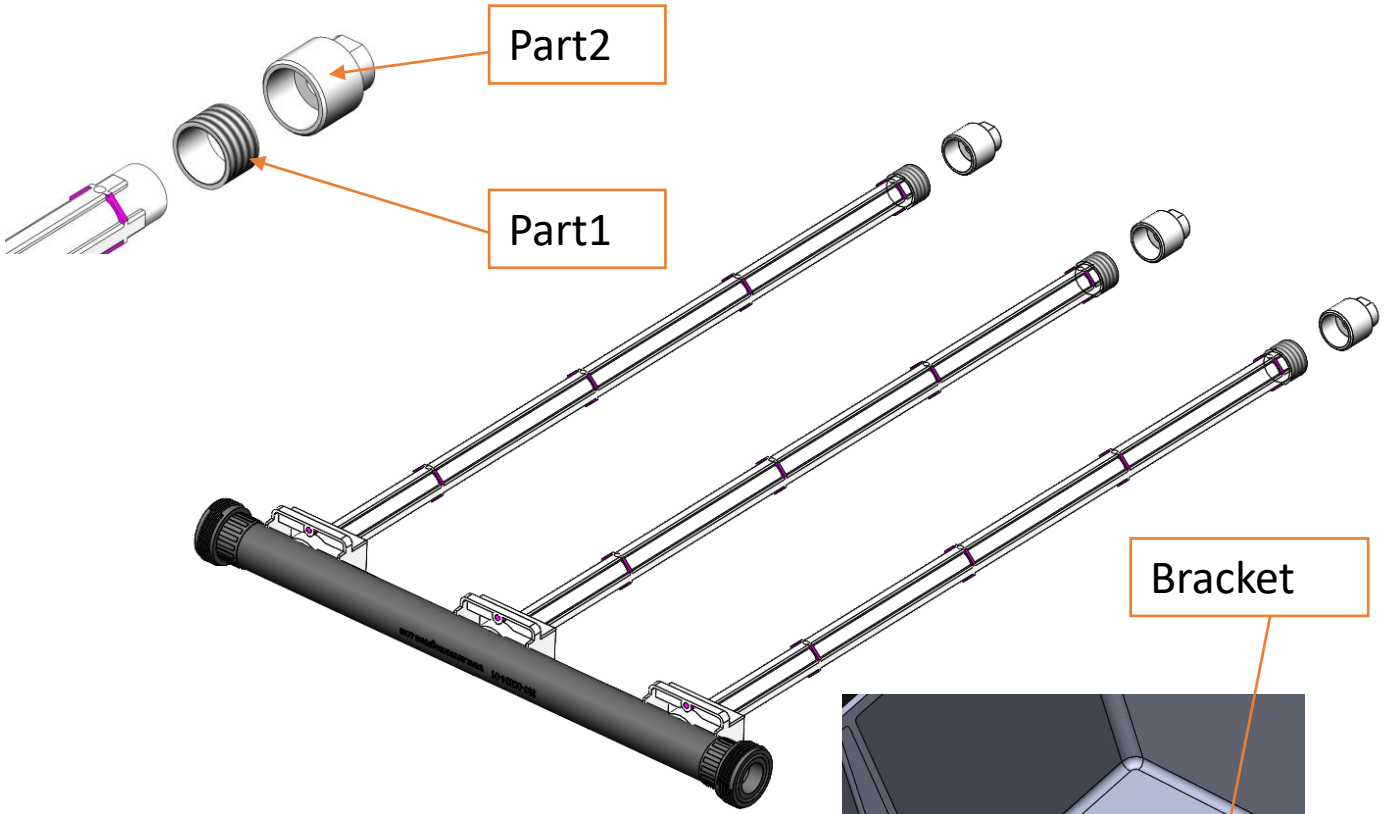

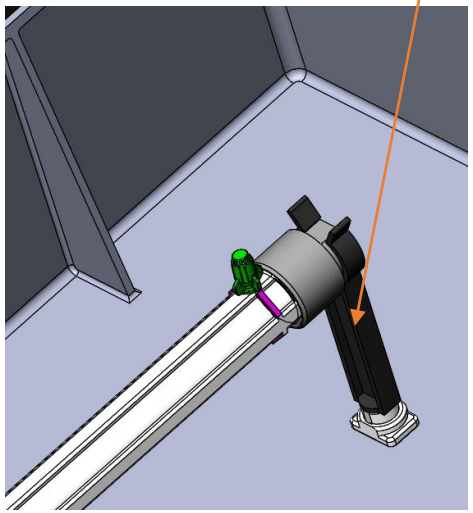

Add 2 parts , the part 1 is bonding at pipe,
the part 2 Connection by thread, Sealing ring in the sealing part2;

To remove part 2, it is necessary to lift the pipeline out of the bracket

Return pump backs up into the bottome layer drain

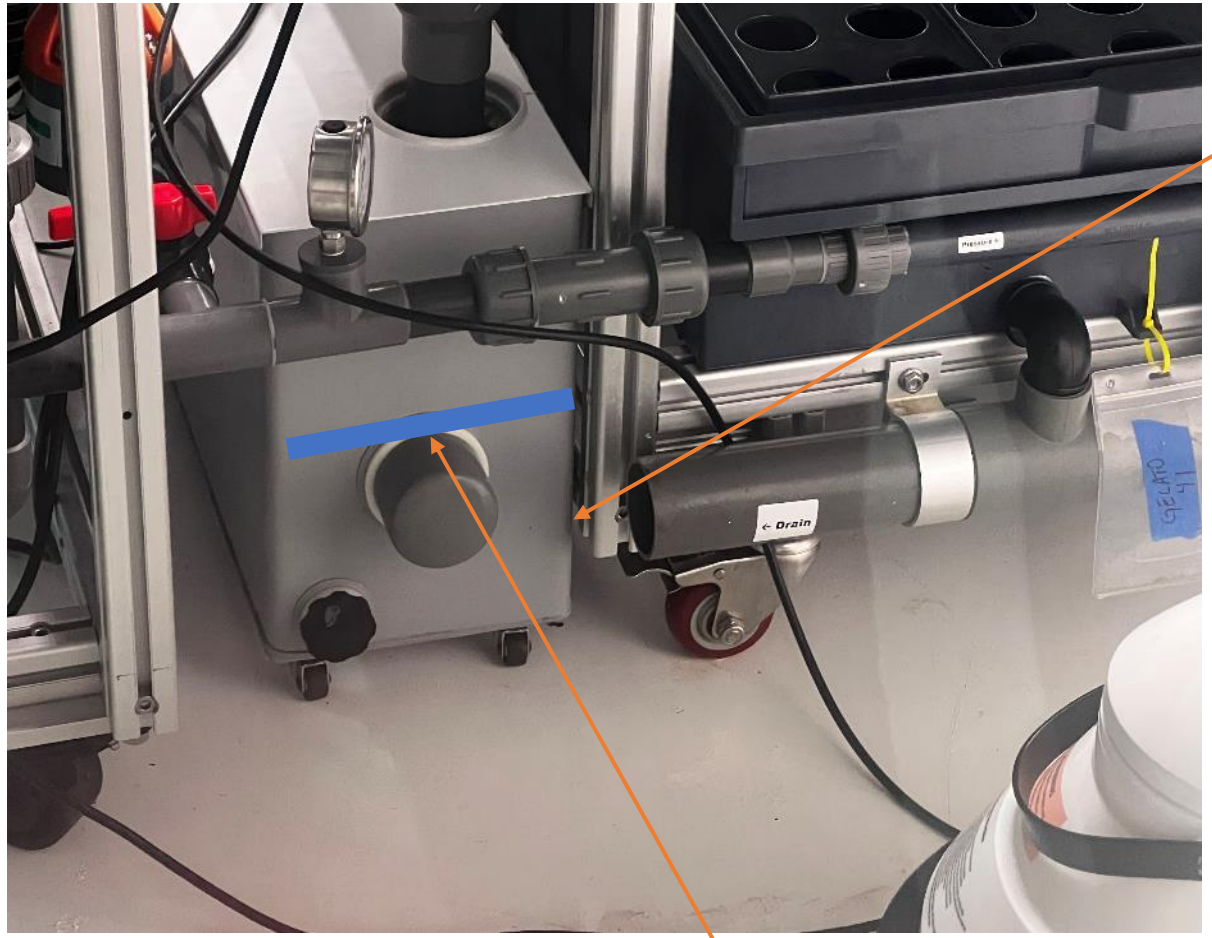

- Customers are not pleased with how the new return pump backflows into the lower drain line of the A2.1
- Customers have disconnected the lower drain line for now

We propose to raise the bottom layer to make sure the bottom drainage pipes will not act as part of a reservoir, and rely on gravity for water return

Water line to trigger water return

Raise the A2.1 to Improve Draining



Add 356mm; from 2539 to 2895 (9.5')

A2.1 Drain Lines

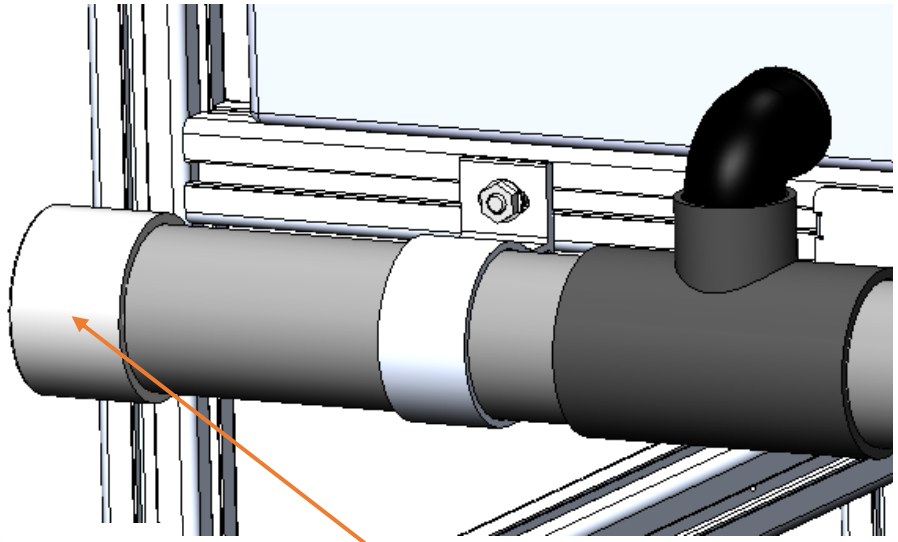



Difficulty in disassembly



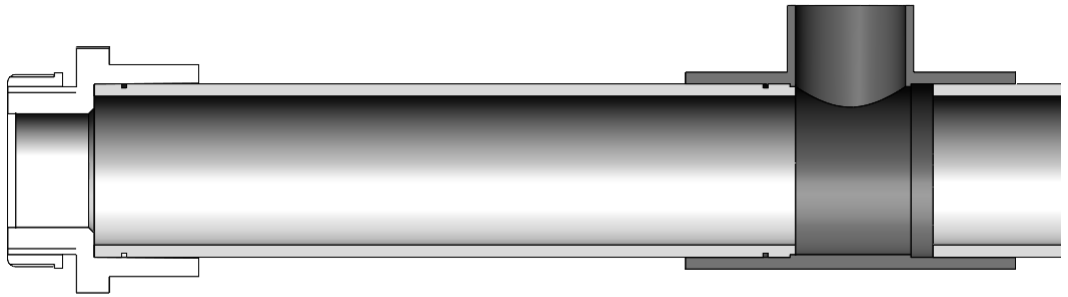

1、It is easier to remove with gloves with glue，
2、Add pipe fittings and use threaded pipe caps， but It will cause difficulty in cleaning the end

A2.1 Drain Lines



363-08009-01

Consider replacing the rubber material of couplers

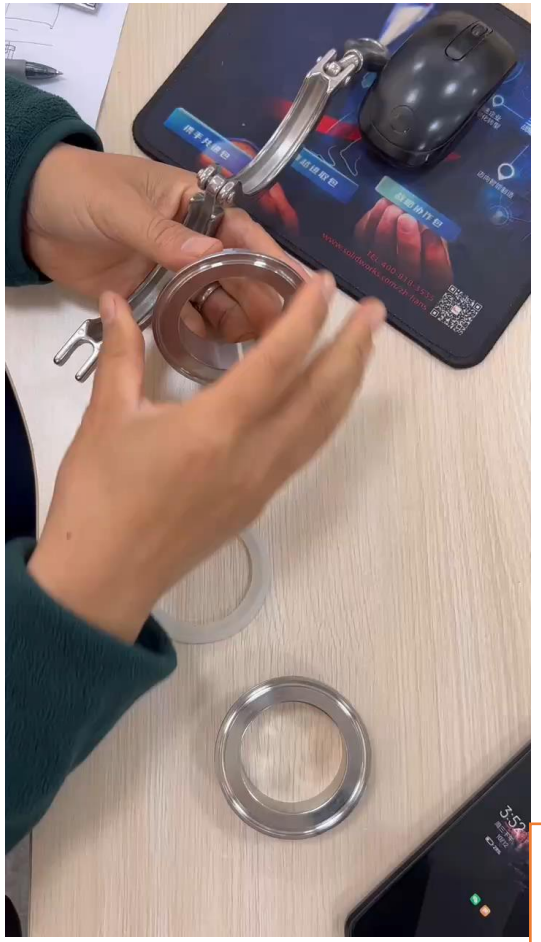

Clamps and gaskets can be purchased directly, and two pieces of pipe fittings need to be processed

A2.1 Drain Line Coupling Solution

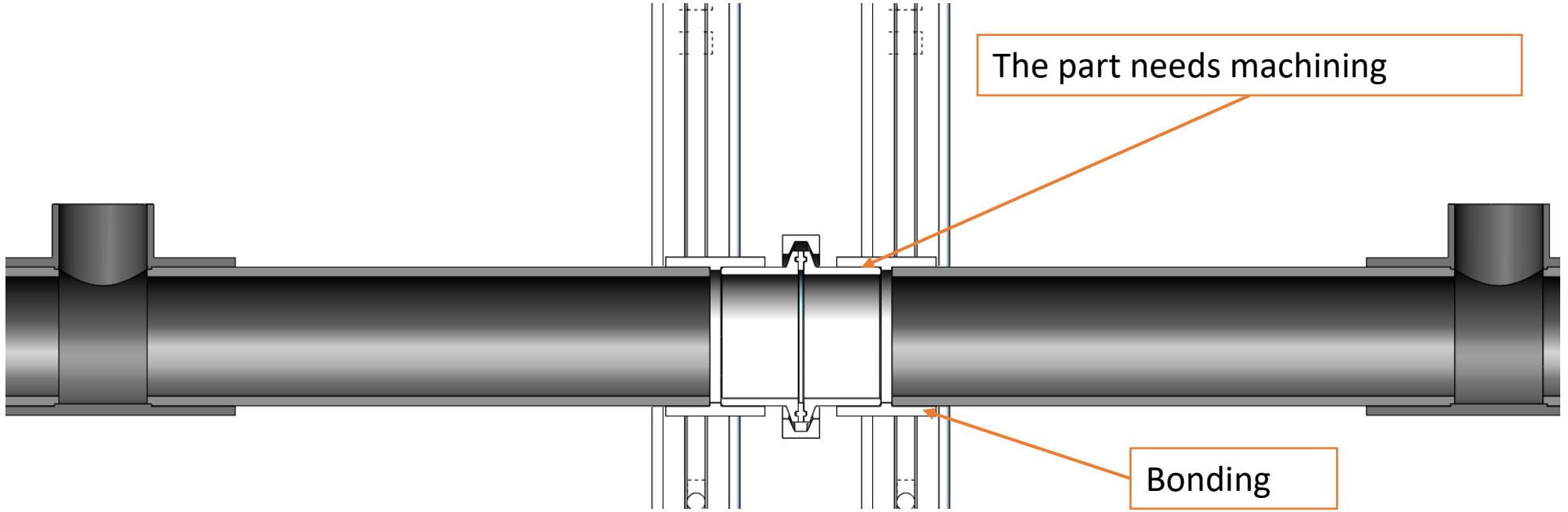

Return pipe

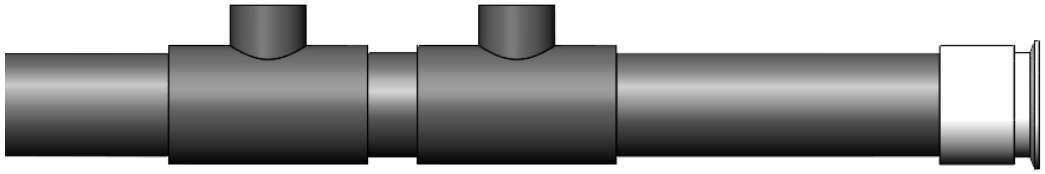

AEtrium-4 Proposed Upgrades to Facilitate Easier Cleaning

FOR AESSENSE INTERNAL USE ONLY

AE4 Remove PRV for Long Rows

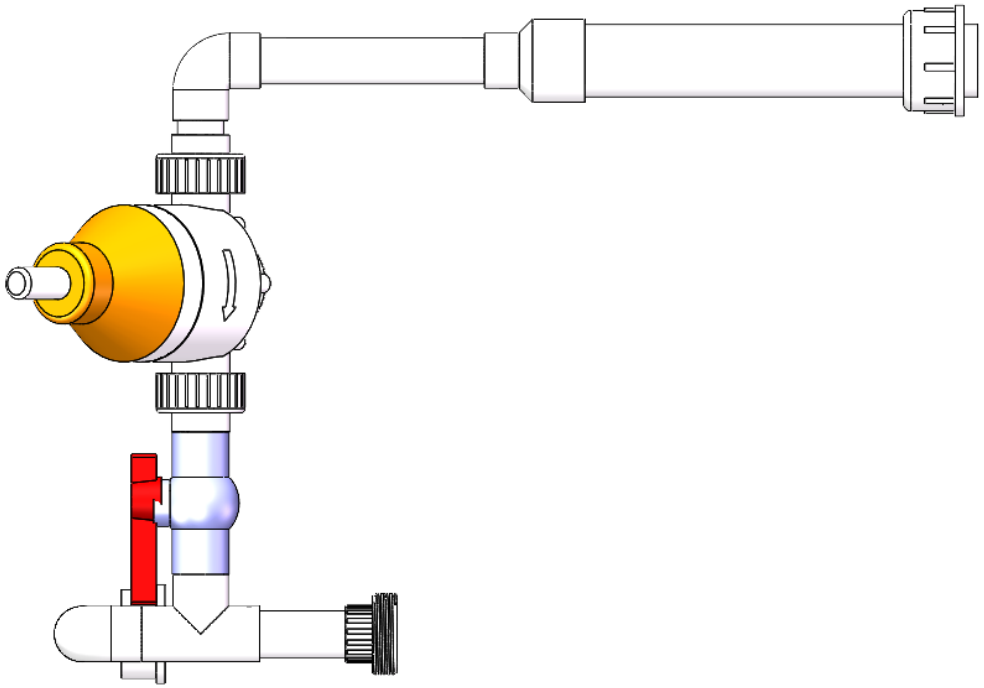



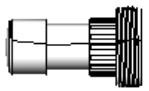

Remove the parts

Use it replace

If there are less than 10 tubs, keep this part, and only replace the right part before cleaning

AE4 Remove PRV for Long Rows

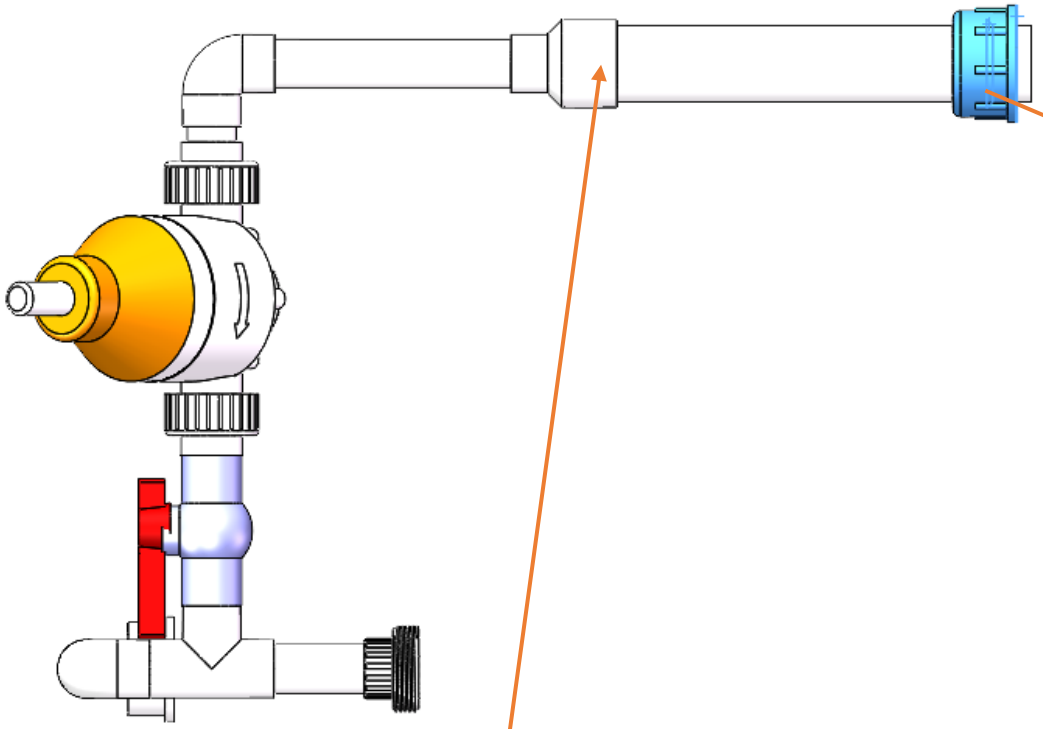

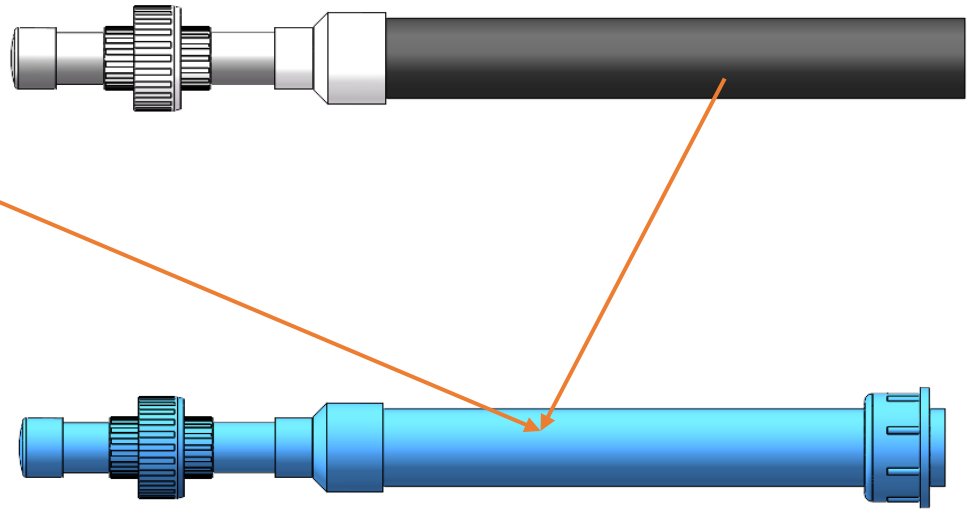

Remove the Unit, and keep highlighted parts

Use the removed parts and the newly provided parts to assemble them and then install them back

Chemical immersion

Step1： Blocking for the drain hole at the first grows tub

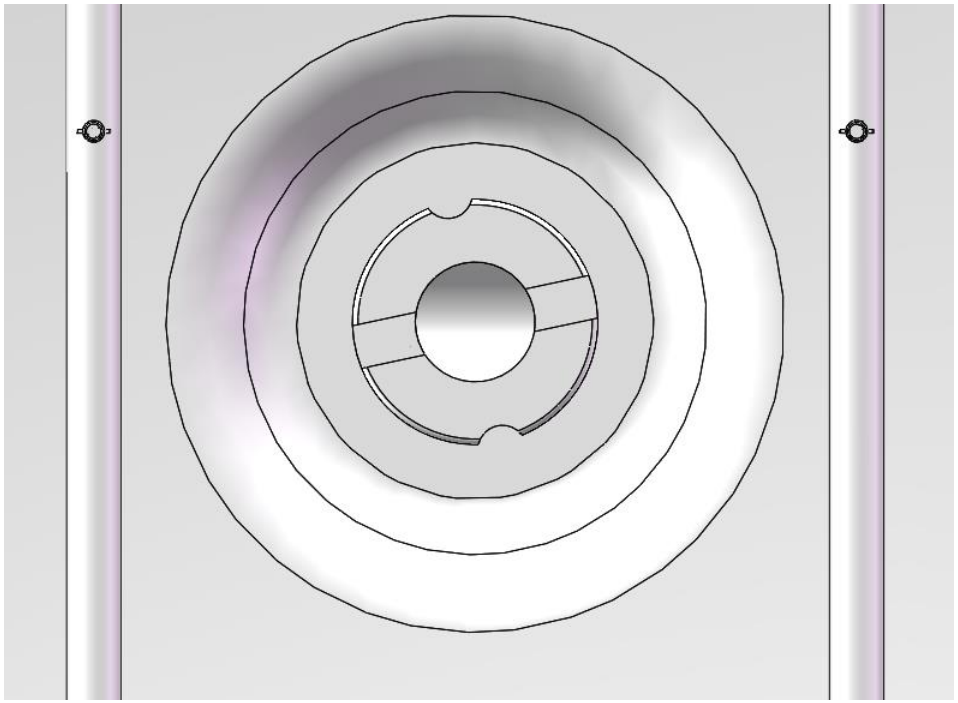



XY-8047	A=16.5	21.5	C=17	11	E=9	黑色、白色
XY-8048	A=17	25	C=10	4	E=7	黑色、白色
XY-8049	A=18	26	C=10	4	E=8	黑色、白色
XY-8050	A=19	27	C=10	4	E=9	黑色、白色
XY-8051	A=19.5	25	C=10	3	E=10	黑色、白色
XY-8052	A=19.5(长款)	25	C=15	3	E=10	黑色、白色
XY-8053	A=20	28	C=10	4	E=10	黑色、白色
XY-8054	A=21	29	C=10	4	E=11	黑色、白色
XY-8055	A=22	29	C=10	4	E=12	黑色、白色
XY-8056	A=23	33	C=10	5	E=13	黑色、白色
XY-8056a	A=23	29	C=10	4	E=13	黑色、白色
XY-8057	A=24	31	C=10	4	E=14	黑色、白色
XY-8058	A=24.5	30	C=10	3	E=15	黑色、白色
XY-8059	A=24.5(长款)	30	C=15	3	E=15	黑色、白色
XY-8060	A=25	35	C=10	5	E=15	黑色、白色

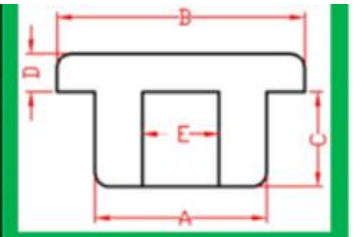



If the drain hole is to be blocked， maybe use the rubber blocking.

[橡胶堵塞头堵孔塞 软胶圆形T型硅胶塞防水密封塞堵头软塞子软胶-tmall.com天猫]

Step:2 Plug the drain pipe

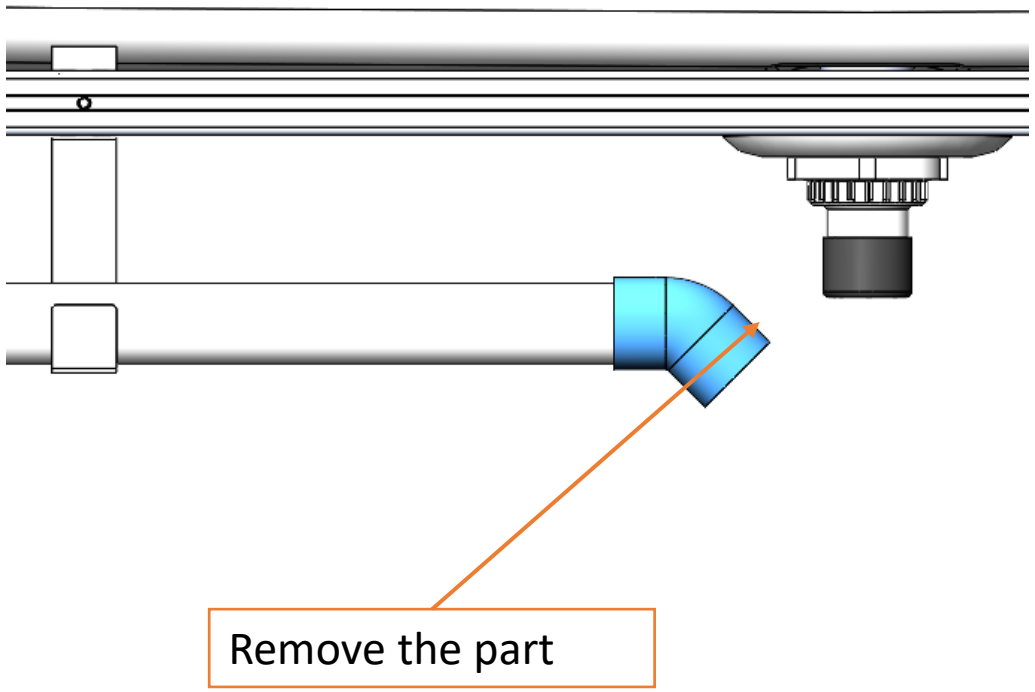

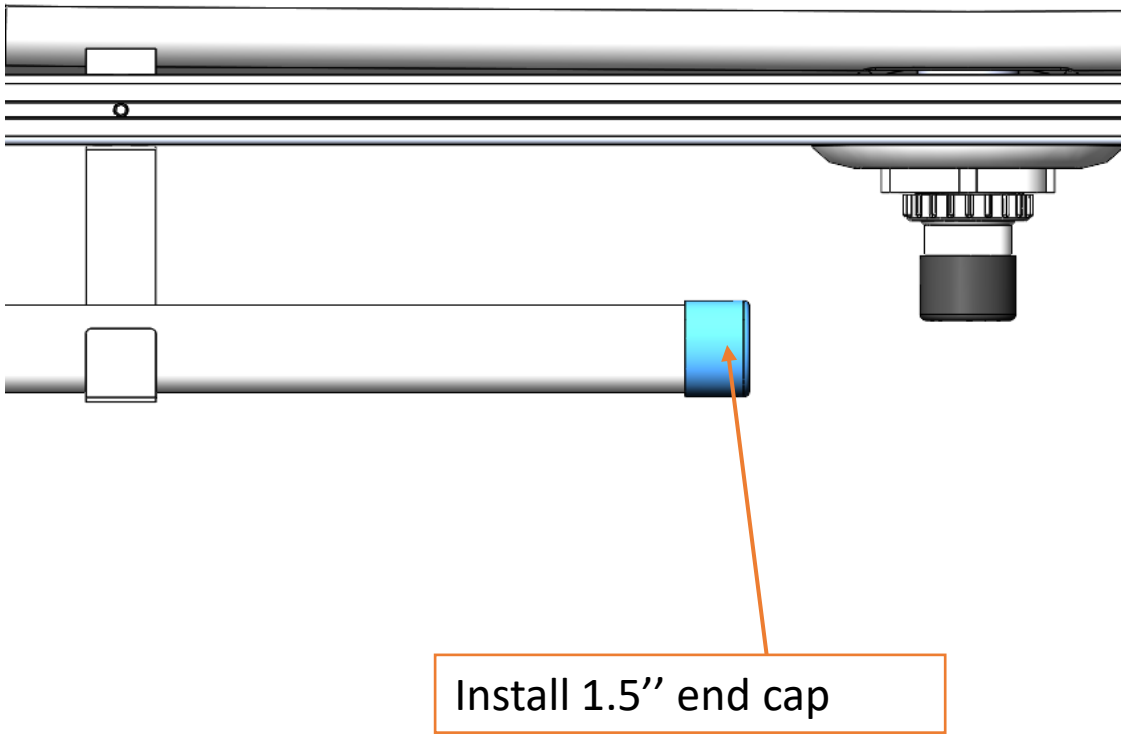

Chemical soaking can be carried out after the above two steps are completed. After soaking, remove the two plugs for drainage

In order to prevent the tee from falling off and leaking, add a hanger

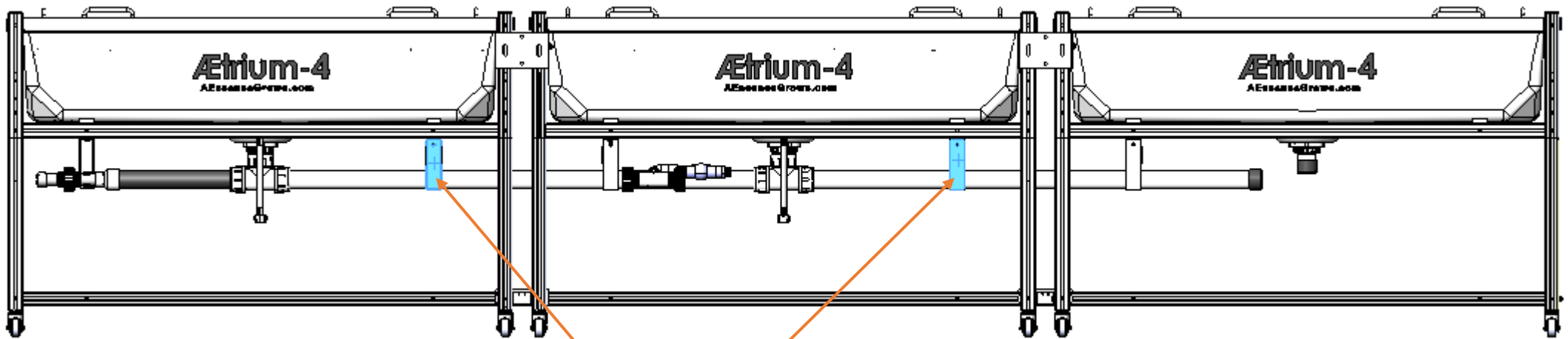

Add 310-30091-01 return pipe hanger

Rinse drain pipe

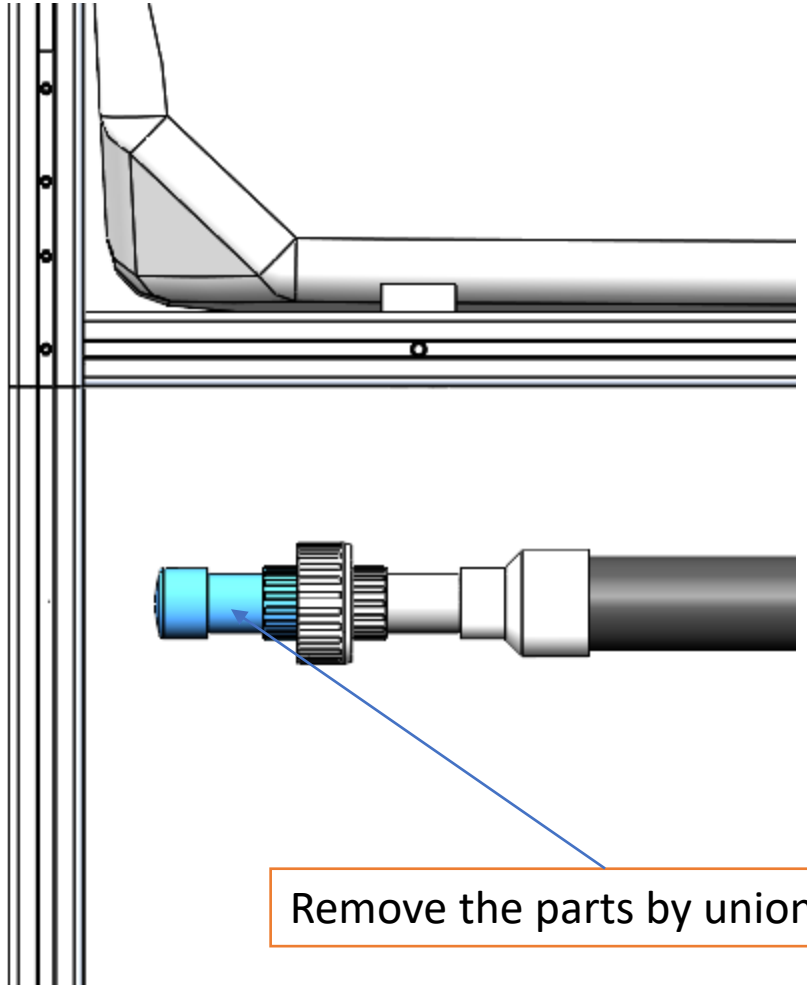

Remove the parts by union

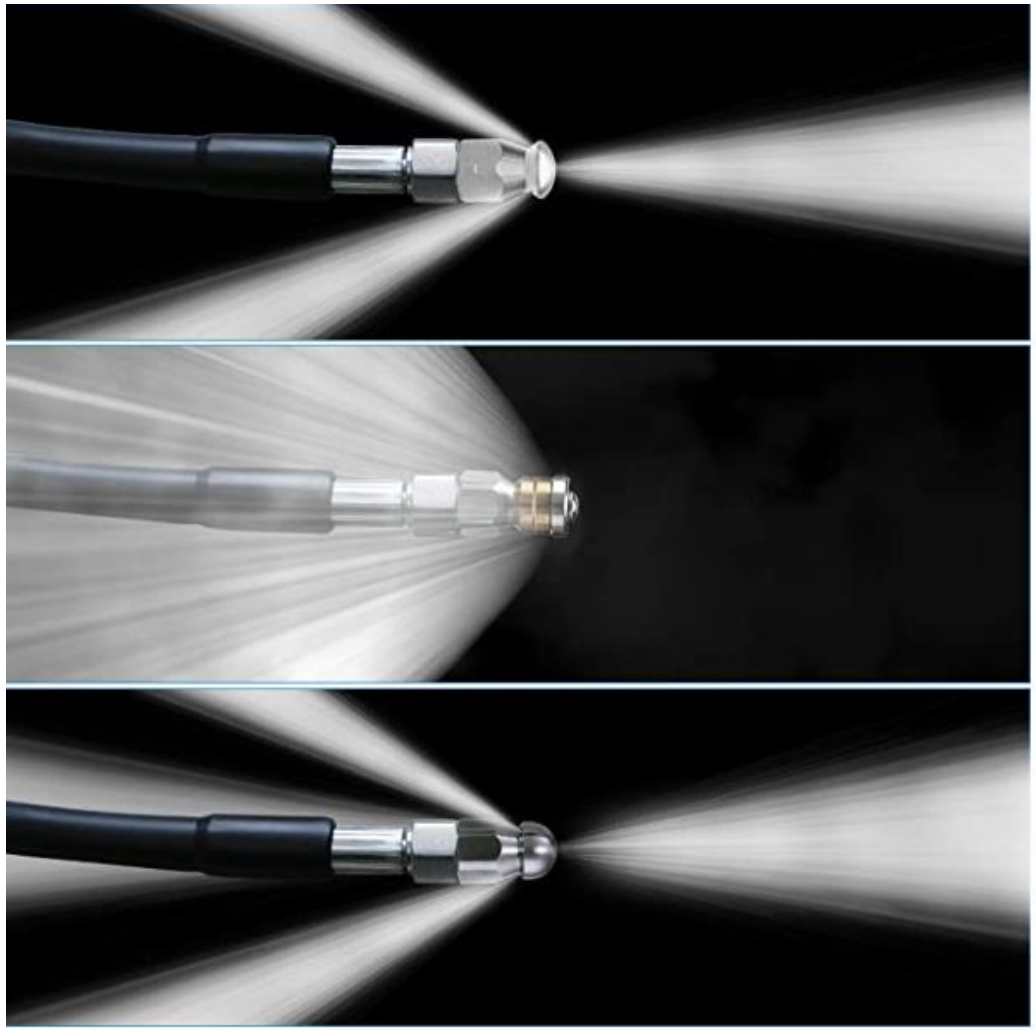

Use the high pressure sewer kit

Manifold enhancement

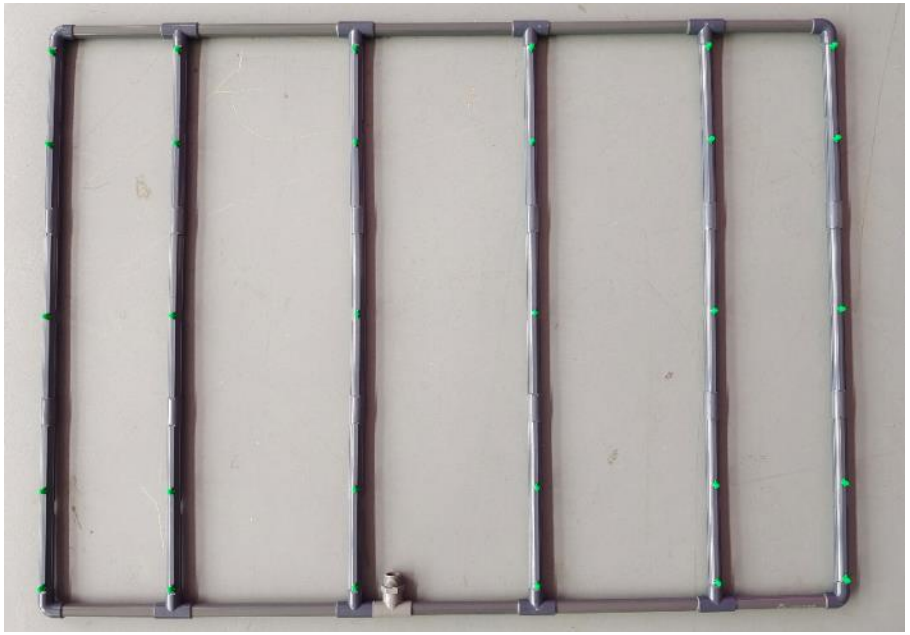

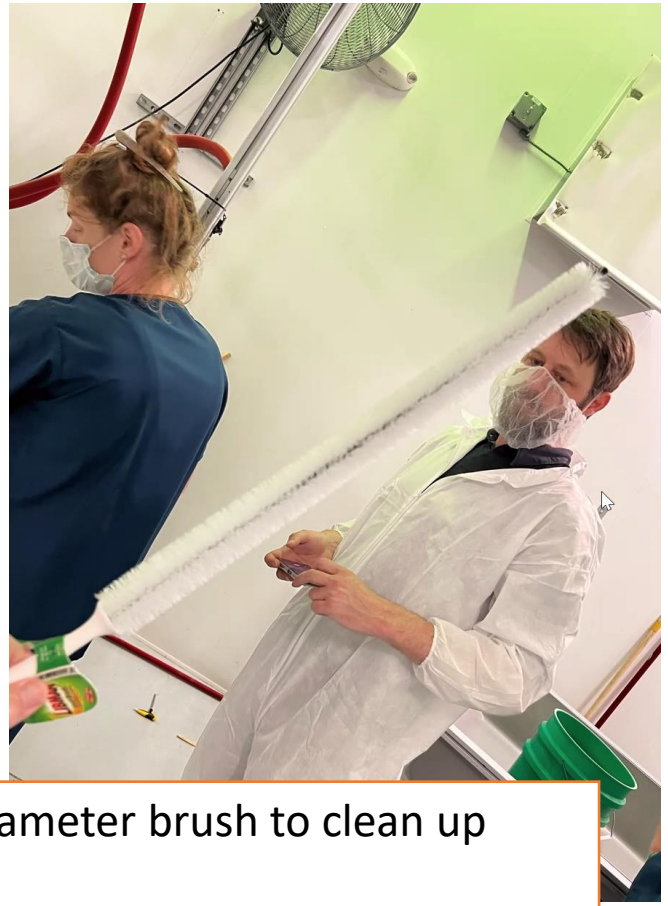

Customer uses this 2” diameter brush to clean up manifold pipes

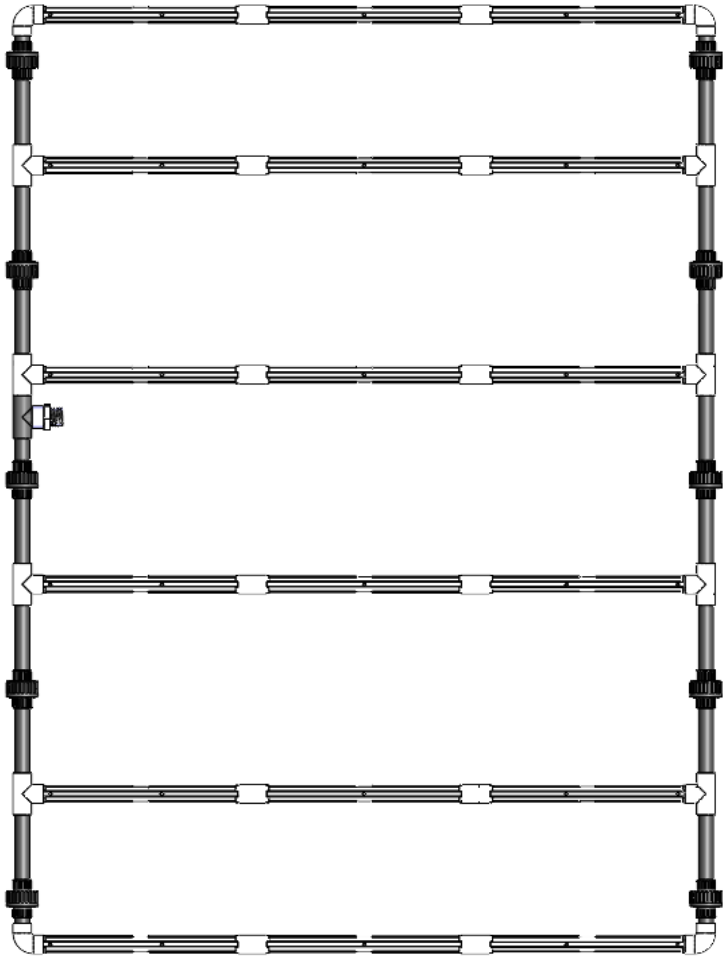

Explode

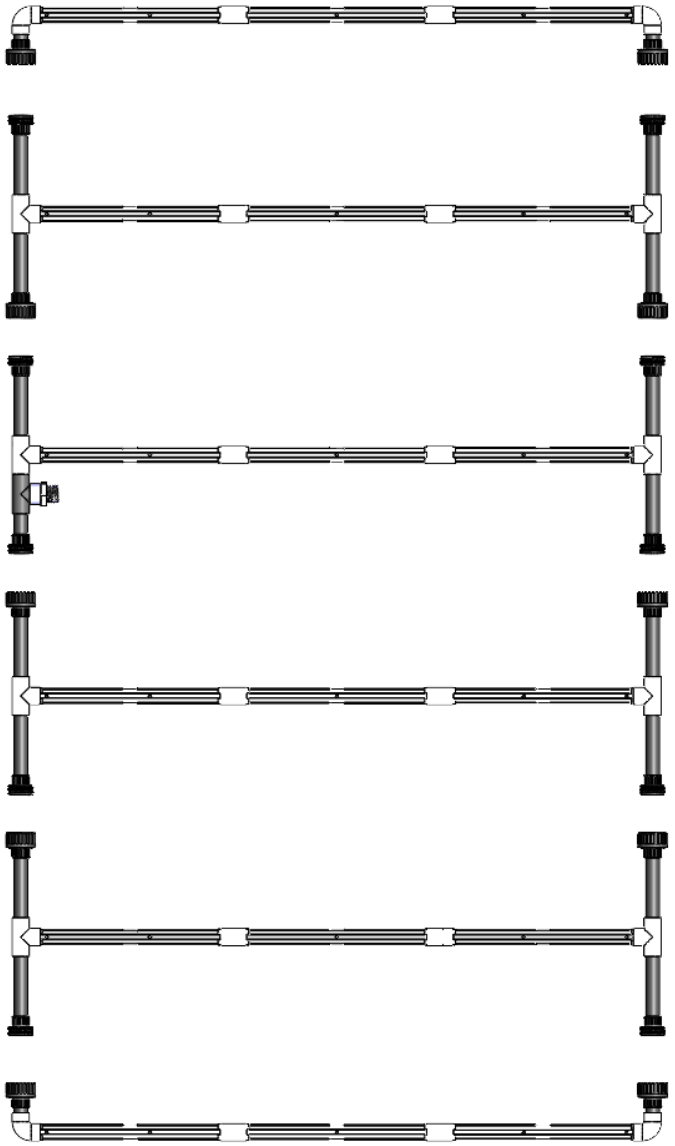

Add 10 Pcs ½ ‘’ Union ,the cost add about 50RMB

Cleanliness is Next to Godliness

- Water Quality
  - RO
  - Needs to be pathogen FREE
  - Dehu water can be recovered by needs to be purified
- The Build Out
  - We recommend clean rooms using panel construction
    - Some of our grow partners are using steel studs with plastic panels
- What do we feel is the optimum rooms size?
  - AEssense feels that optimum is 70-100 tubs/lights
- Floors
  - Epoxy coating seems to be the standard but it seems to pull up in many applications

FOR AESSENSE INTERNAL USE ONLY

Cleanliness is Next to Godliness

- IPM
  - Cloning: the best way to bring pests into a building
  - Procedures
    - Questioning visitors
    - Changing clothes
    - Quarantining
    - Bake rooms
  - Engineering controls
    - Air Showers
      - Some don’t use them and some that use them have had IPM issues
    - Positive pressure
    - ORP control
      - Oxidizers used
      - Water Chilling

FOR AESSENSE INTERNAL USE ONLY

Agenda

1. Sign in/light breakfast: 8:30-9:00
2. Introductions: 9:00-9:30
    - Chris Wrenn (VP Americas Sales, meeting moderator) welcome
    - Bob Chen (CEO/President): opening remarks
    - AEssense Support Team introductions
3. User introductions: 9:30-10:30
    - Company size, how many tubs/lights
    - Personal history, Industry history
    - How are you doing? Harvests/year, Yield/tub, $/lb
4. “Cleanliness is Next to Godliness” Cleaning and sanitation discussion:10:30-11:30
    - Cleanliness overview
    - AEtrium-2.1 cleaning specifics
    - AEtrium-4 cleaning specifics
        - Harvest Procedures
5. The road to cloning success in the AEtrium-2.1: 11:30-12:00
6. Working Lunch:12:00-1:00
7. AEtrium System Coming Upgrades: 12:00-12:30
    - Software
    - Hardware
    - User recommended upgrades
8. Blooming Success in the AEtrium: 12:30-1:00
    - Nutrients
    - Root health
    - Canopy management
9. Environmental controls: 1:00-1:30
    - Operational targets
    - Challenges
    - Preferred vendors
10. Closing: 1:30-2:00
    - AEssense comments
    - User comments

FOR AESSENSE INTERNAL USE ONLY

The Road to Cloning Success in the AEtrium-2.1

AEssenseGrows



RoadMap Overview

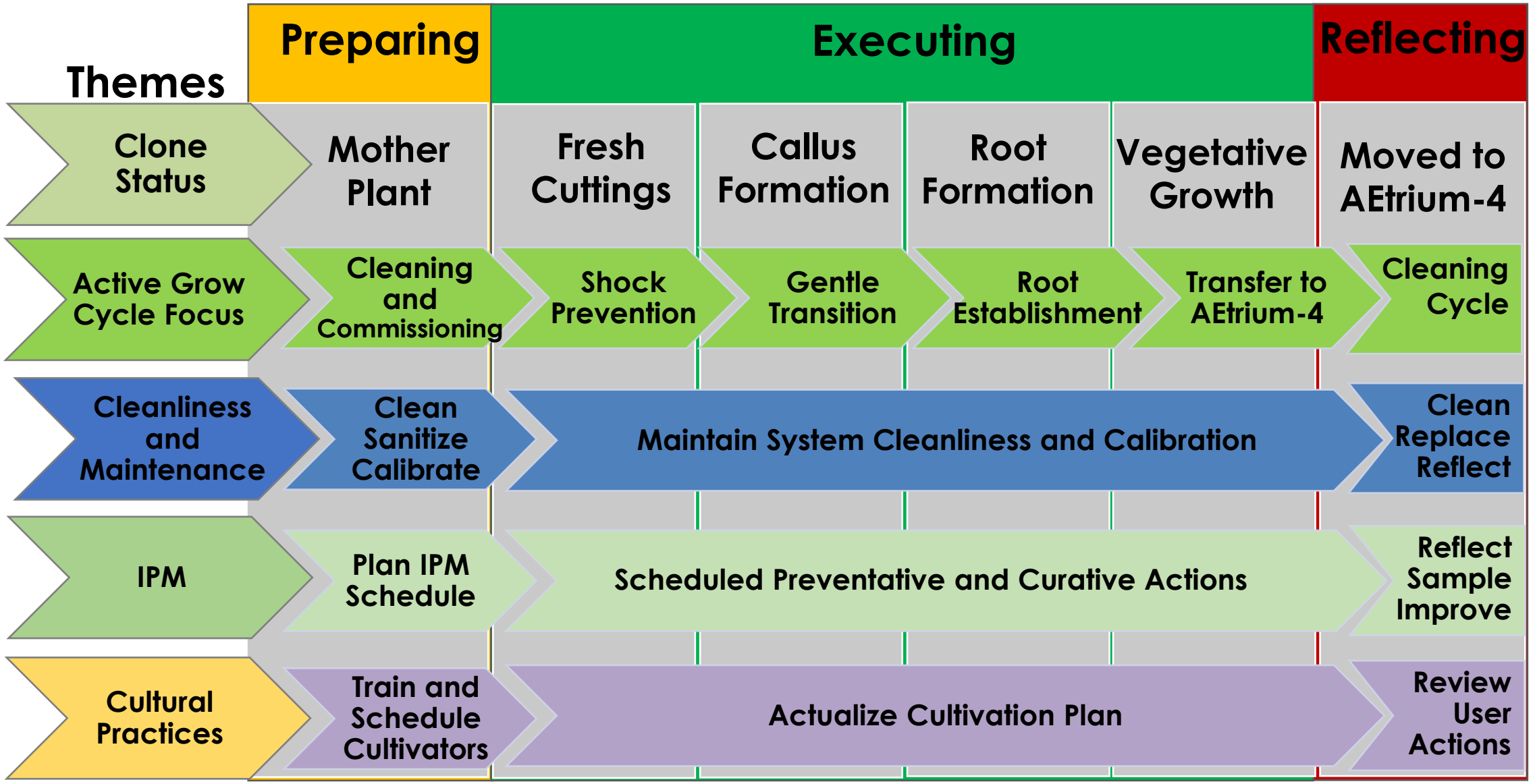

Sourcing Cuttings

In house

- Ideal

Outsourced

- Not recommended



Taking Cuttings

- Timing
- Location
- Proper handling





Callus Formation

- Monitor for root growth
- Maintain water cleanliness
- Optional: rooting hormones

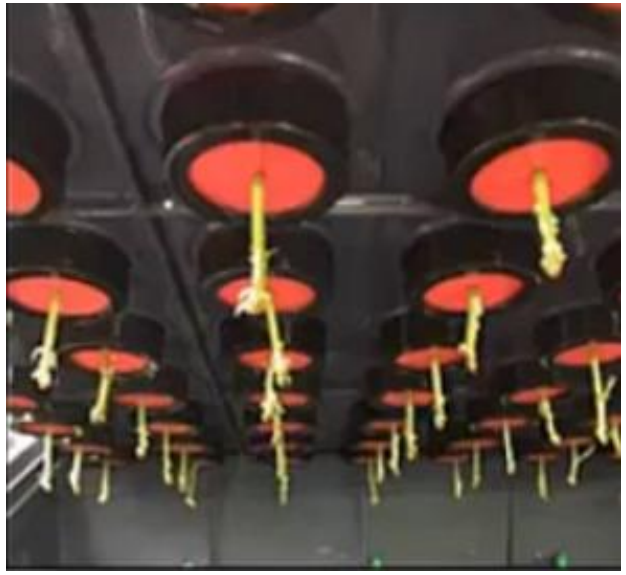



Begin Hardening Plants

- Slowly reduce humidity
- Increase light
- Reduce irrigation frequency
- Increase EC



Clone Status | Mother Plant | Fresh Cuttings | Callus Formation | Root Elongation | Vegetative Growth | Moved to AEtrium-4

Prepare for Transfer

- Continue hardening
- Transfer to AE-4
- Maintain momentum





Cleaning

- Design grow plans for cleaning purposes





Commissioning

- Design grow plans to test critical systems

- Calibrate Sensors

Don’t Shock Plants!

Critical Points

- Low PPFD
- Low VPD
- Minimal Nutrients





Promote Root Growth

Critical

- Increase PPFD
- Increase VPD
- Increase Nutrients
- Decrease irrigation Frequency



Active Grow Cycle Focus | Cleaning and Commissioning | Shock Prevention | Gentle Transition | Root Establishment | Transfer to AEtrium-4 | Cleaning Cycle

Maintain Momentum from AE-2.1 to AE-4

Cloning - AE-2.1



Vegging - AE-4



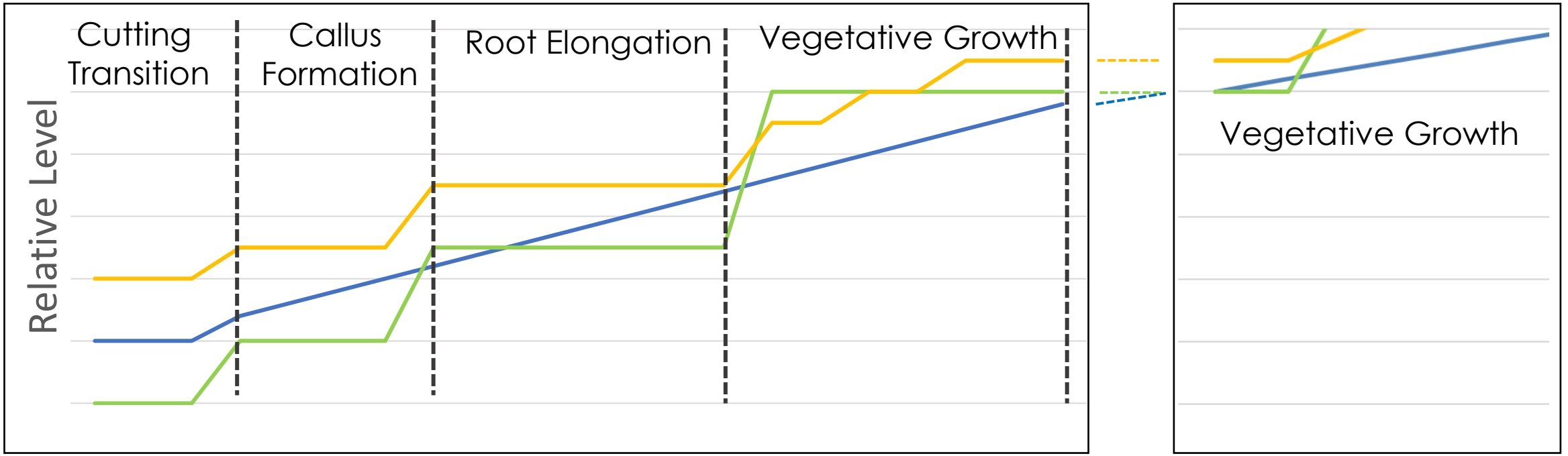

Cleaning

- Remove all debris
- Apply chemical cleaners

Sa...

***Note**: Surfaces must be clean for sanitizers to be effective.*

- Reservoirs and Surfaces
- Irrigation Lines













Scheduled Cleaning and Calibration

Cleaning (once a week)





- Filters
- Drain elbows
- Tray tops
- Cultivation room

Calibration (once every 2 weeks)



- EC and pH sensors

IPM Foresight

- Maintain cleanliness
- Spot, diagnose, and monitor an issue
- Intervene when necessary



Control Pathogens Before They Take Control

Preventative



- Water changes
- Pathogen & biofilm suppression
  - Chemical oxidation
  - Beneficial applications



Curative

- Treat or remove diseased plants

Train Cultivators

- Educate staff who frequently interact with the s

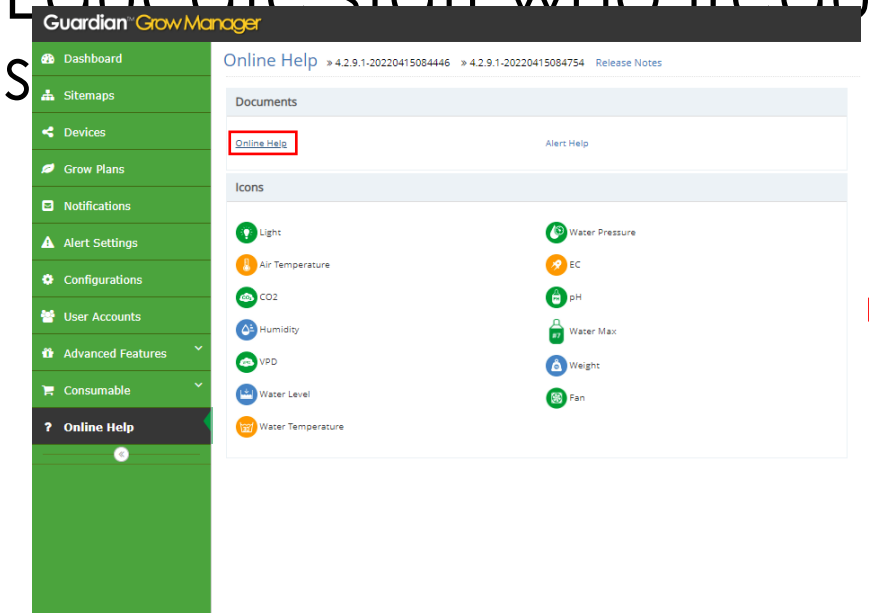

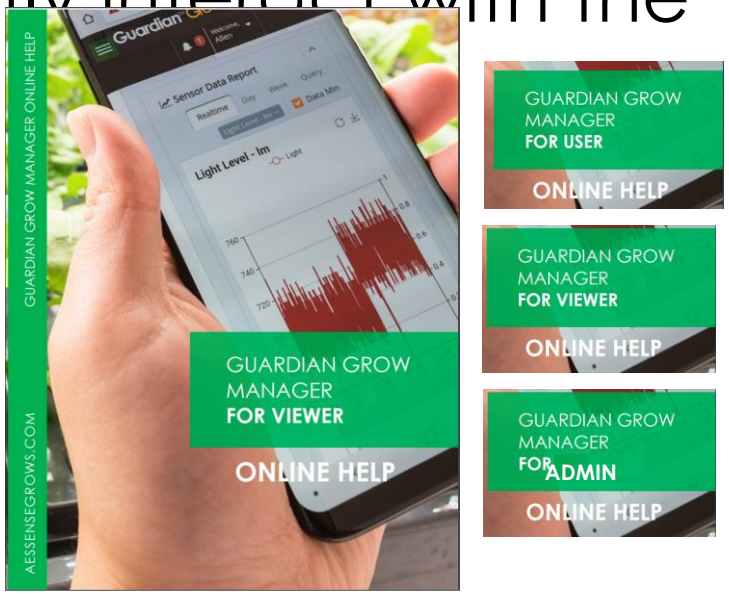

Actualize cultivation plans

- Follow SOPs
- Record changes to original plan
- Record changes and any anomalies

Autonomously Assisted

The AEtrium System is: ~~Autonomous~~

RoadMap Review

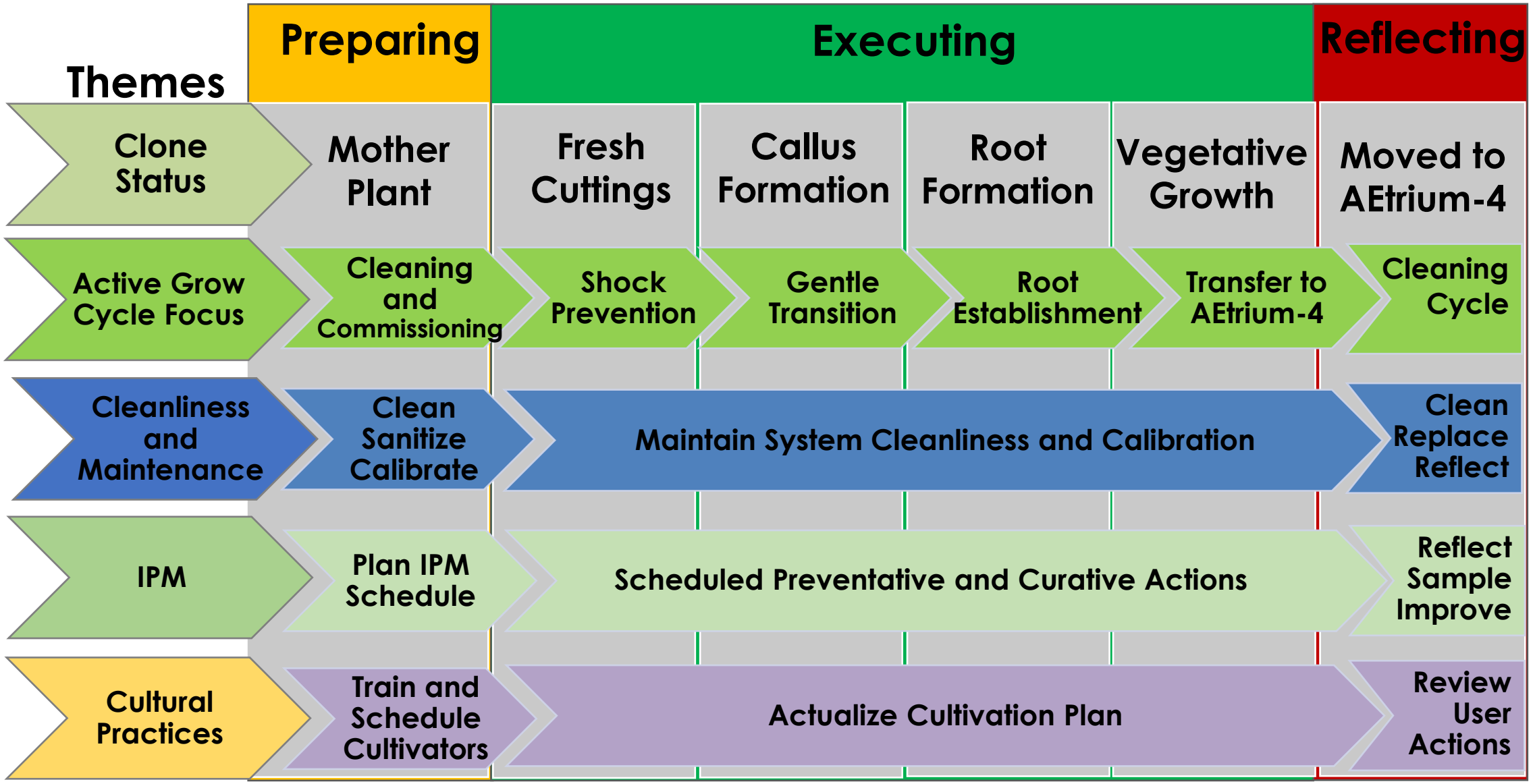

Agenda

1. Sign in/light breakfast: 8:30-9:00
2. Introductions: 9:00-9:30
    - Chris Wrenn (VP Americas Sales, meeting moderator) welcome
    - Bob Chen (CEO/President): opening remarks
    - AEssense Support Team introductions
3. User introductions: 9:30-10:30
    - Company size, how many tubs/lights
    - Personal history, Industry history
    - How are you doing? Harvests/year, Yield/tub, $/lb
4. “Cleanliness is Next to Godliness” Cleaning and sanitation discussion:10:30-11:30
    - Cleanliness overview
    - AEtrium-2.1 cleaning specifics
    - AEtrium-4 cleaning specifics
        - Harvest Procedures
5. The road to cloning success in the AEtrium-2.1: 11:30-12:00
6. Working Lunch:12:00-1:00
7. AEtrium System Coming Upgrades: 12:00-12:30
    - Software
    - Hardware
    - User recommended upgrades
8. Blooming Success in the AEtrium: 12:30-1:00
    - Nutrients
    - Root health
    - Canopy management
9. Environmental controls: 1:00-1:30
    - Operational targets
    - Challenges
    - Preferred vendors
10. Closing: 1:30-2:00
    - AEssense comments
    - User comments

FOR AESSENSE INTERNAL USE ONLY

Hardware

- ASD V2
- AErix Wet & Light lifting equipment
- WSE+ (ORP support)
- Nursery-6 & Nursery-9
- AE2.1 R4

ASD V2

- **Faster response time for Temperature and Humidity**

Temperature from ~25C to ~15C	T63	T90
ASD V1	4.5mins	11.3mins
ASD V2	0.5mins (28s)	1min (57s)
Temperature from ~15C to ~25C	T63	T90
ASD V1	9.4mins	21.5mins
ASD V2	0.5mins(25s)	1min (53s)
Humidity from ~40% to ~90%	T63	T90
ASD V1	Not available	Not available
ASD V2	25s	37.5s
Humidity from ~90% to ~40%	T63	T90
ASD V1	Not available	Not available
ASD V2	15s	40s

- **Easy swap out for cleaning or replacement**

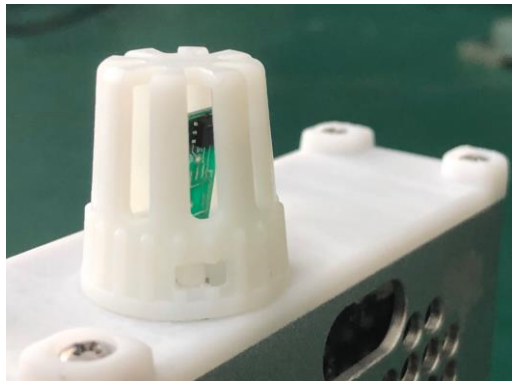



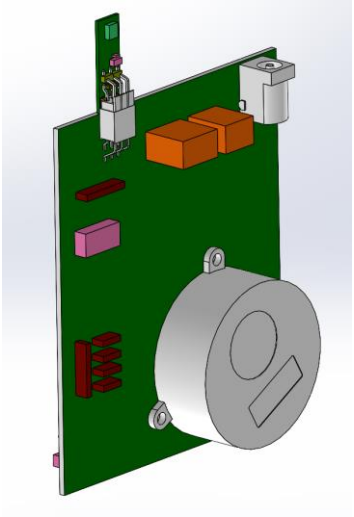

AErix Wet

- **High PPF/PPE**
- **Easy installation and packaging**
- **High Uniformity**
- **Lower cost**

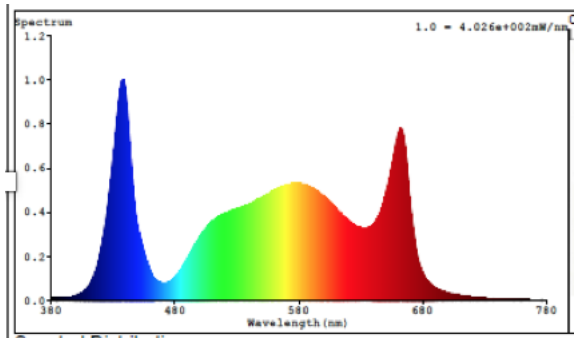

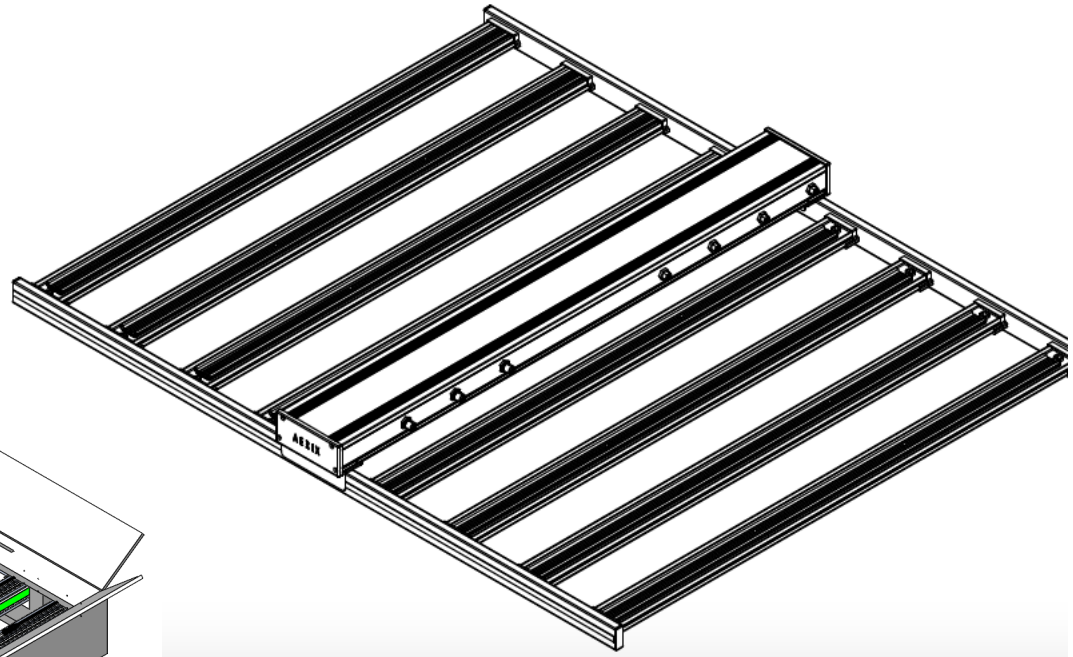

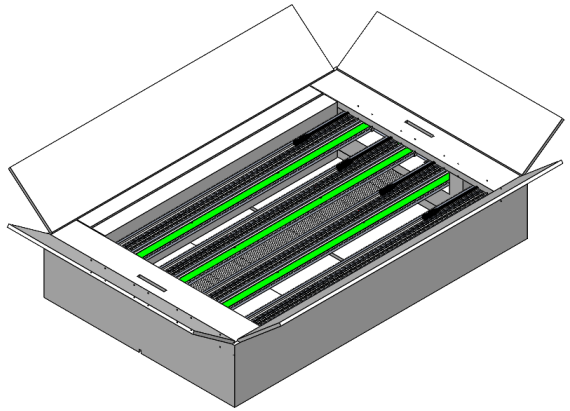

AErix Damp (DLC)	AErix Wet Low Version	AErix Wet High Version
704W @120V	725W @220V	730W @220V
2.26 @120V	2.48	2.59
1590	1794	1895
8	8	8
120-270	120-277	120-277
IP65	IP66, Wet	IP66, Wet

Light Lifting Equipment

Integrated with GGM through Modbus

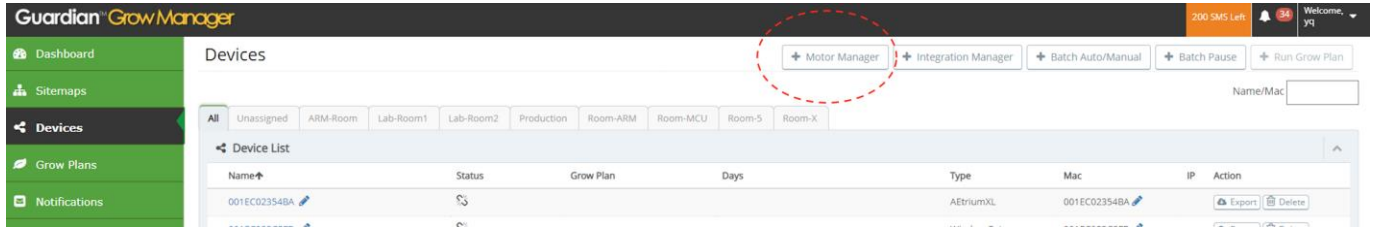



WSE+ (ORP)

- **Build-in ORP support in WSE+**
- **Integrated in GGM**

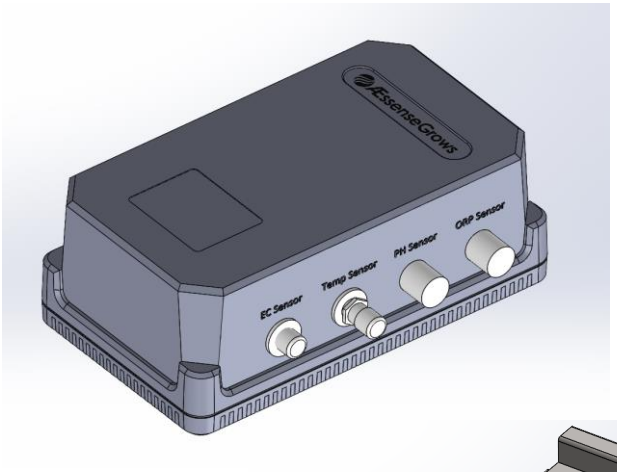

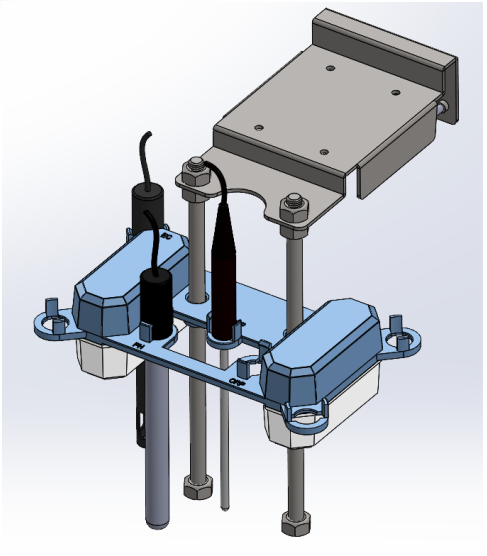

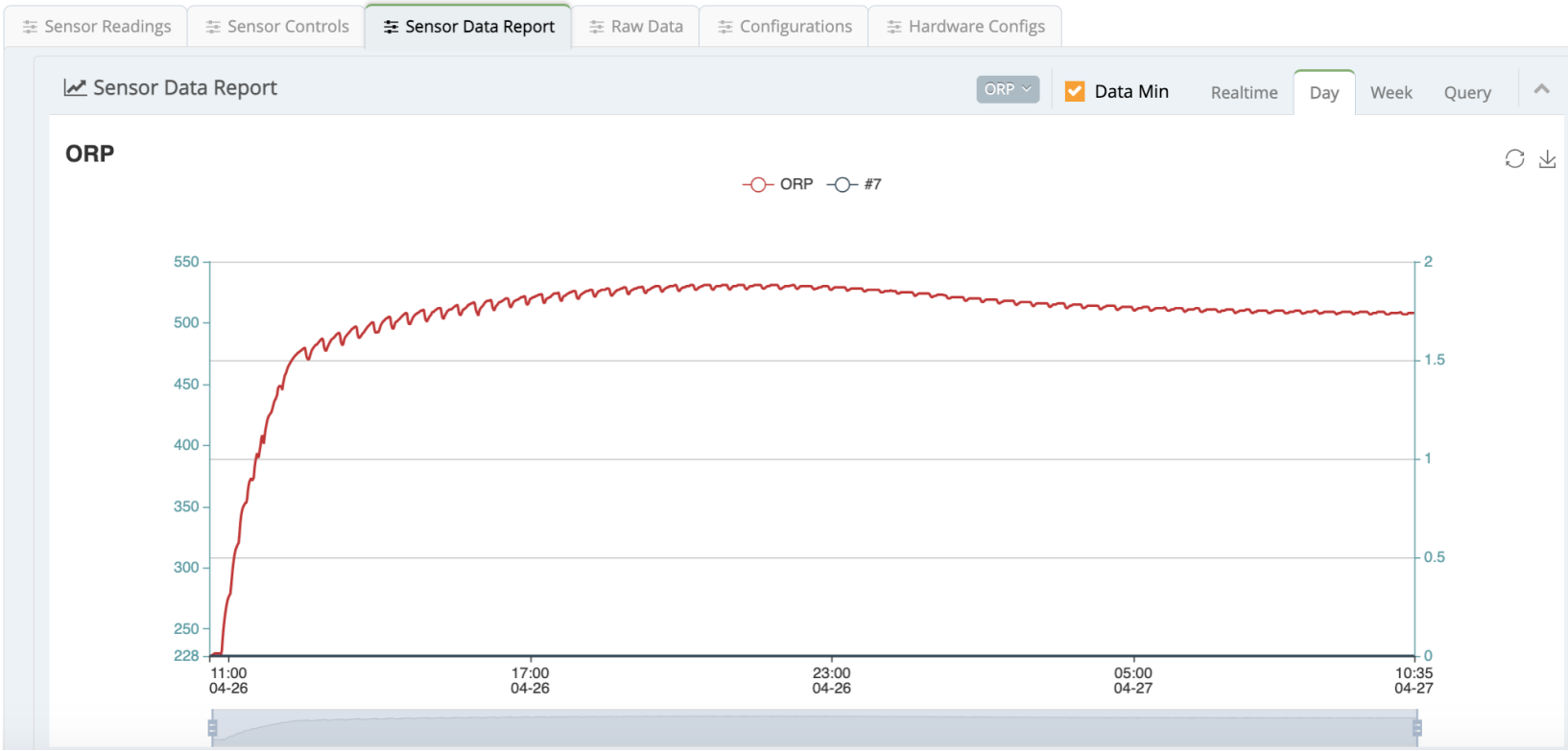

Nursery-6 & Nursery-9

- **Easy starter kit**
- **For small size growers**
- **For research institues**





Software

Features Under Trial:

Standalone Device Control Application
Modbus integration
OQ & PQ
Fast dosing
User Actions
Forms
Nutrient usage integration with METRC

Incoming Improvements & Guardian Intelligence:

User Interface Improvements
Multiple sensor report
Water usage report
Nutrient usage report

Standalone Device Control Application

- **Provides individual device control without server**
- **For small grower to have a quick start with less cost**

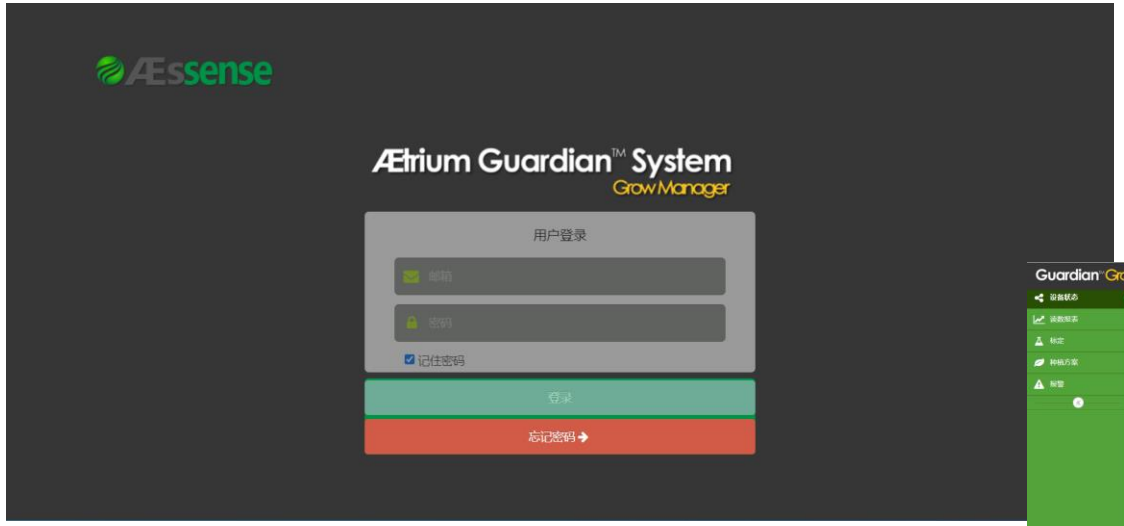

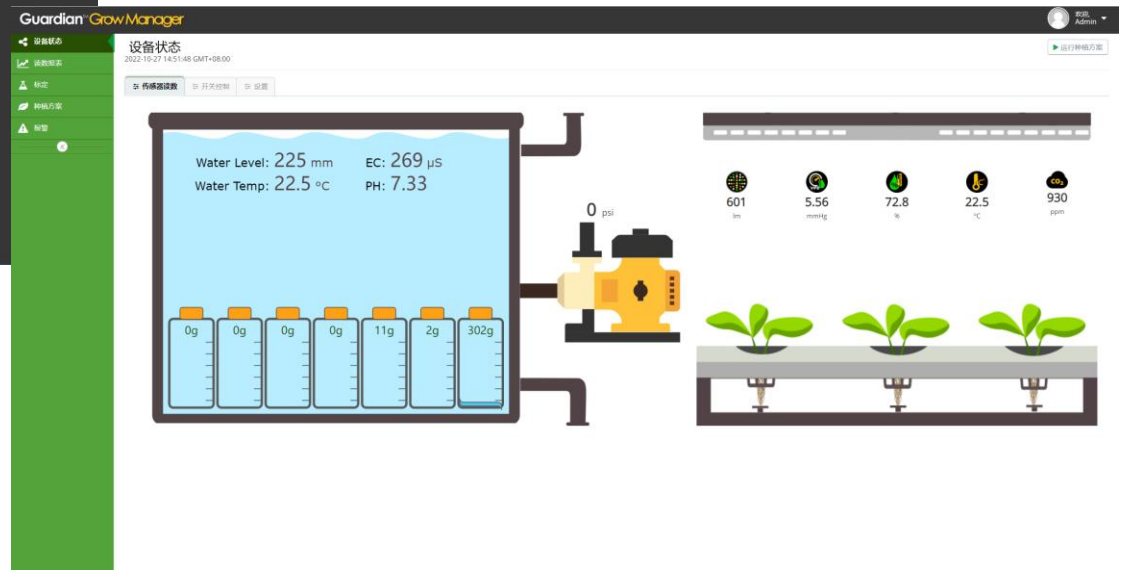

Modbus Integration

- **Integrate with 3rd party devices easily**

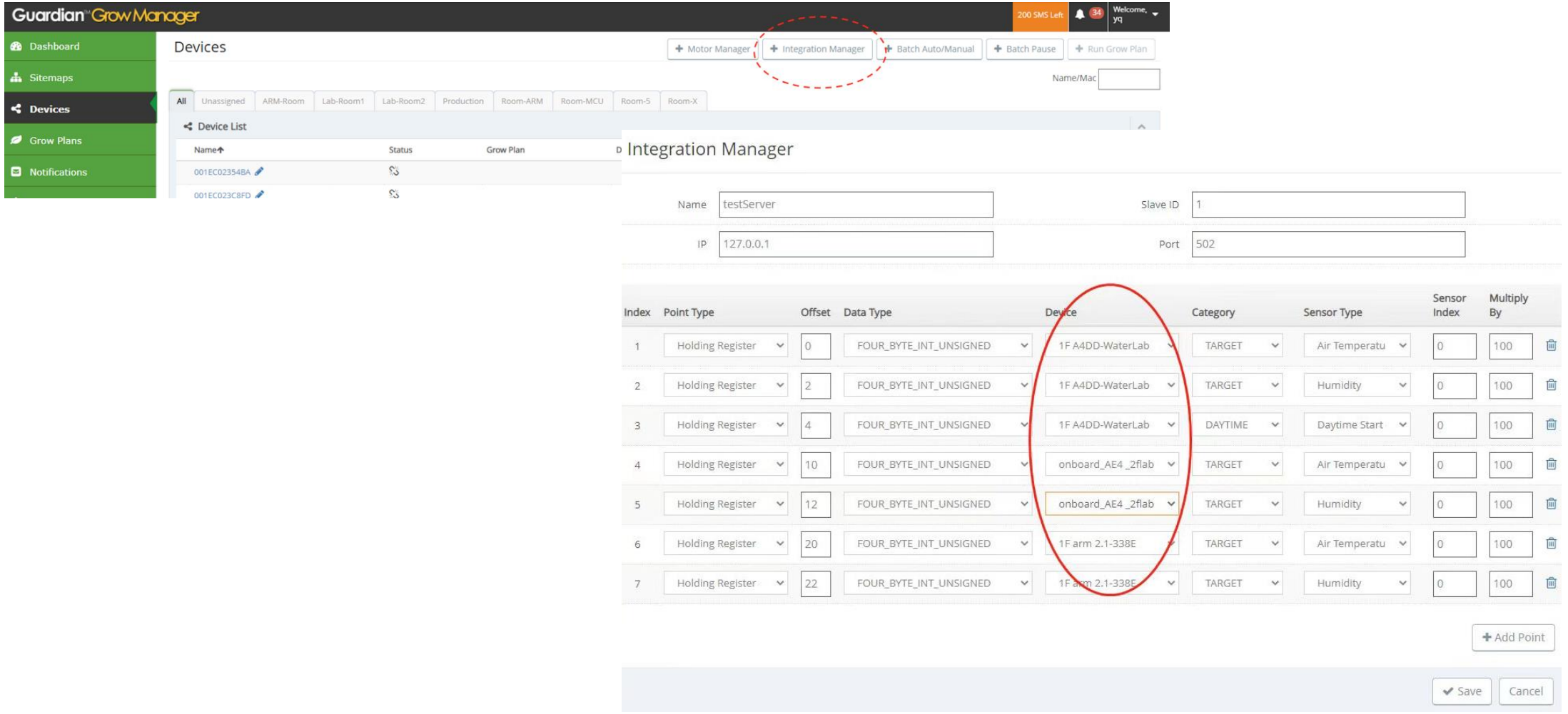

OQ & PQ

- **Check & Report after commissioning**
- **GMP requirements**

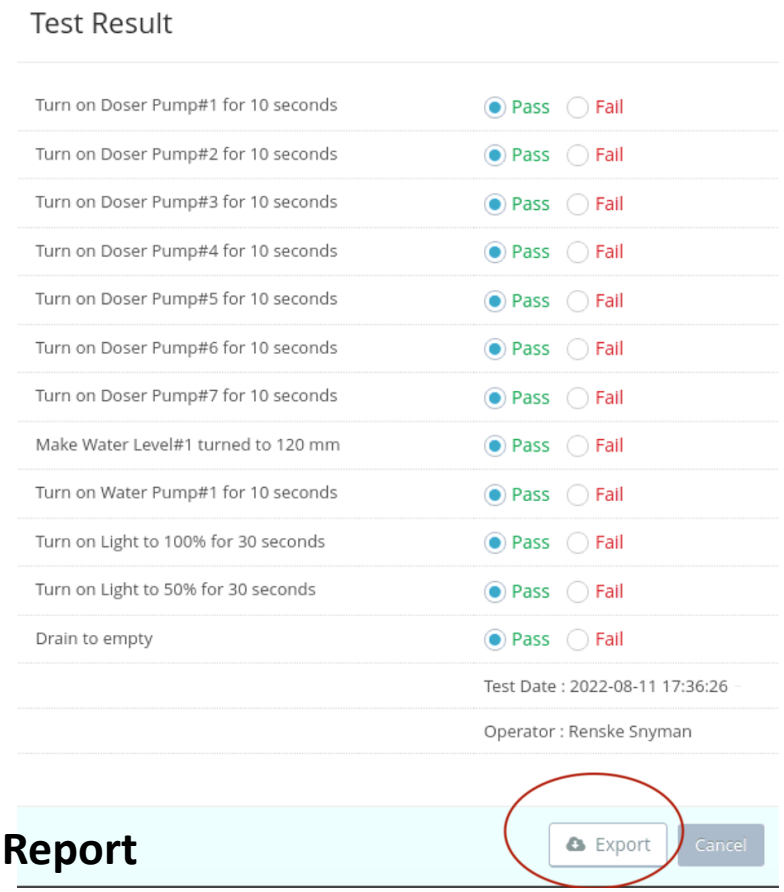

OQ Report

Test Report

Device MAC : 001EC037C11D
Device Type : AEtrium4(UL)
Test Date : 2020-10-19 11:25:48
Test Type : Performance Qualification
Operator : jin jie
Signature : jin jie
Test Result :

Task	Result
Turn on Light to 30%	Fail
Drain to empty	Pass
Make Water Level#1 turned to 160 mm	Fail
Make Water Pump turned to 1 undefined	Pass
Turn off Water Pump for 1 seconds	Pass
Add 1.9 ml/gal of Bottle#7	Pass
Turn on Light to 50%	Fail
Turn on Water Pump for 60 seconds	Pass
Turn off Water Pump for 180 seconds	Pass
Make EC turned to 2000 uS	Fail
Add 11.4 ml/gal of Bottle#7	Pass
Turn on Light to 100%	Fail
Turn on Water Pump for 120 seconds	Pass
Turn off Water Pump for 300 seconds	Pass
Make pH turned to 5.85	Pass
Add 11.4 ml/gal of Bottle#7	Pass

PQ Report in PDF

Fast dosing

- **Increase the EC dosing speed for RO water from hours to less than an hour**
- **Improved dosing accuracy**

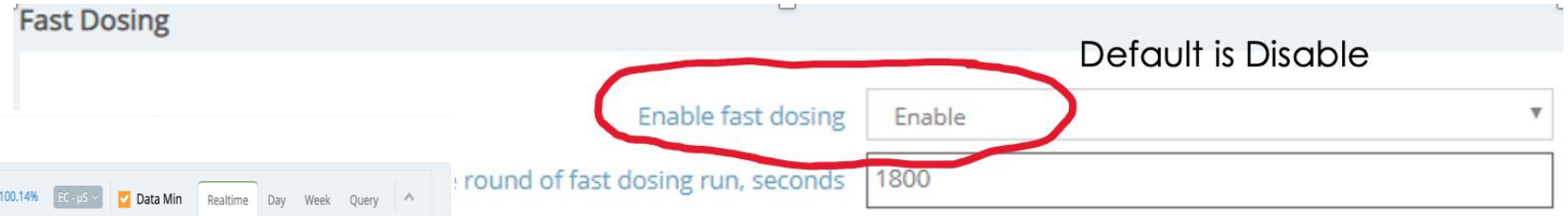

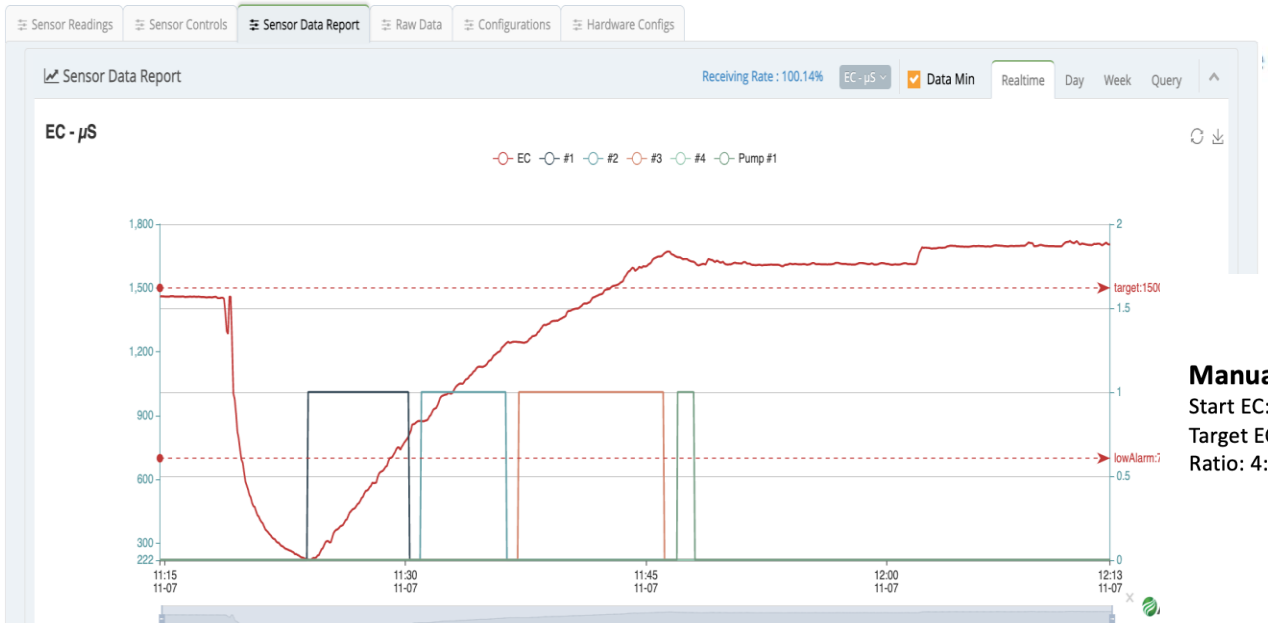

Manual Dosing
Start EC: 1228us
Target EC: 2000us
Ratio: 4:3:2:2

Nutrient	Addition (ml)	Initial EC reading	EC After Addition	Real EC increase after addition (us)	Expected (us)	Delta (us)
100A	435	1228	1483	255	257	2
100B	326	1483	1629	146	186	40
125A	220	1629	1791	162	190	28
150B	220	1791	1903	112	137	25

Fast Dosing
Start EC: 1229us
Target EC: 2000us
Ratio: 4:3:2:2

Nutrient	Addition (ml)	Expected (ml)	Nutrient Delta (ml)	First Round		Second Round		Real EC Increase After Addition (us)	Expected (us)	Delta (us)
				Initial EC	EC after Addition	Initial EC	EC After Addition			
100A	450	436	14	1229	1448	1893	1922	248	254	6
100B	370	327	43	1451	1604	1924	1946	175	184	9
125A	270	218	52	1609	1771	1952	1975	185	188	3
150B	270	218	52	1776	1887	1981	1996	126	135	9

User Actions

- **We are going to keep improving it!**

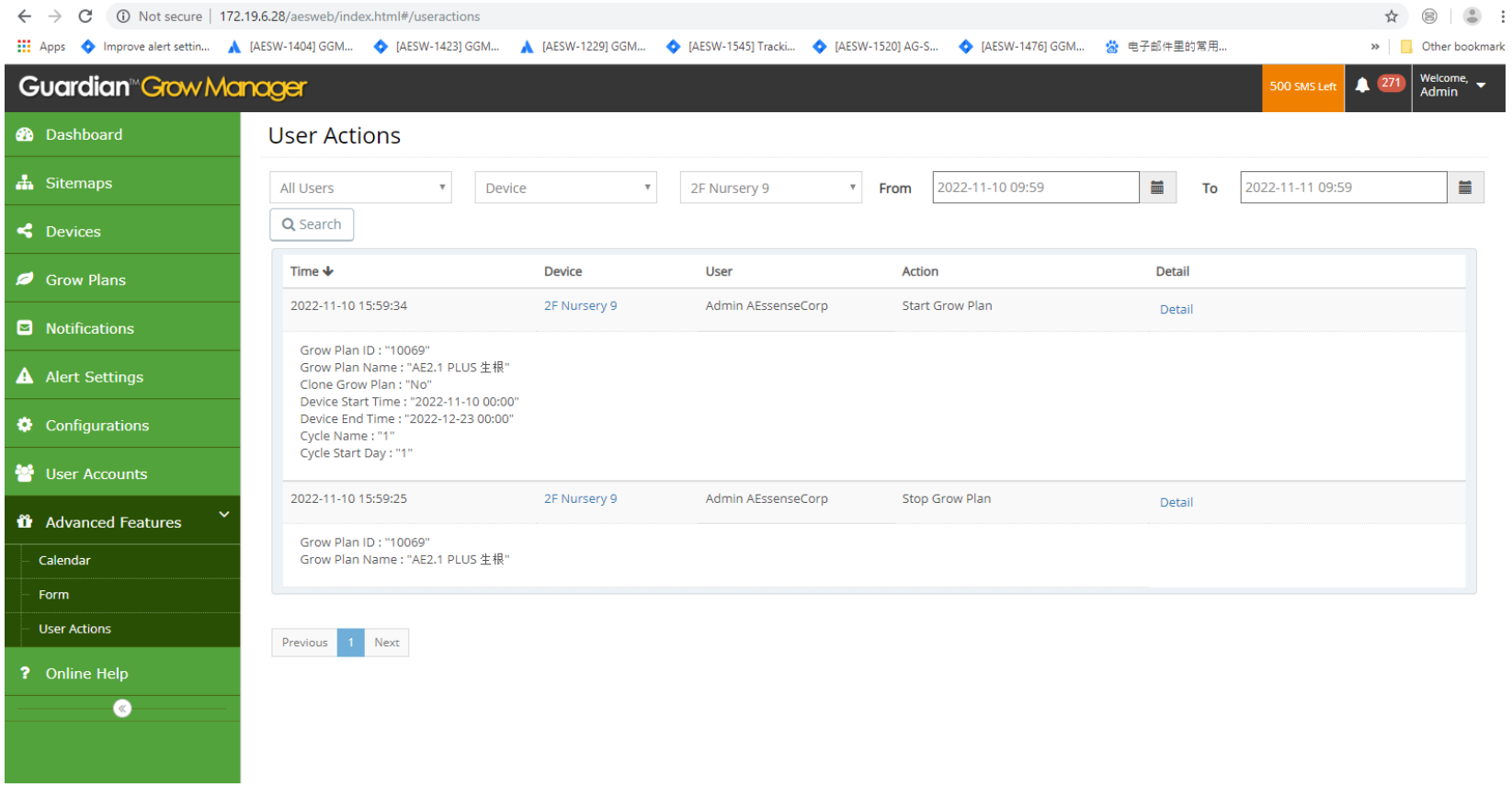

Forms

- **We are going to keep improving it!**

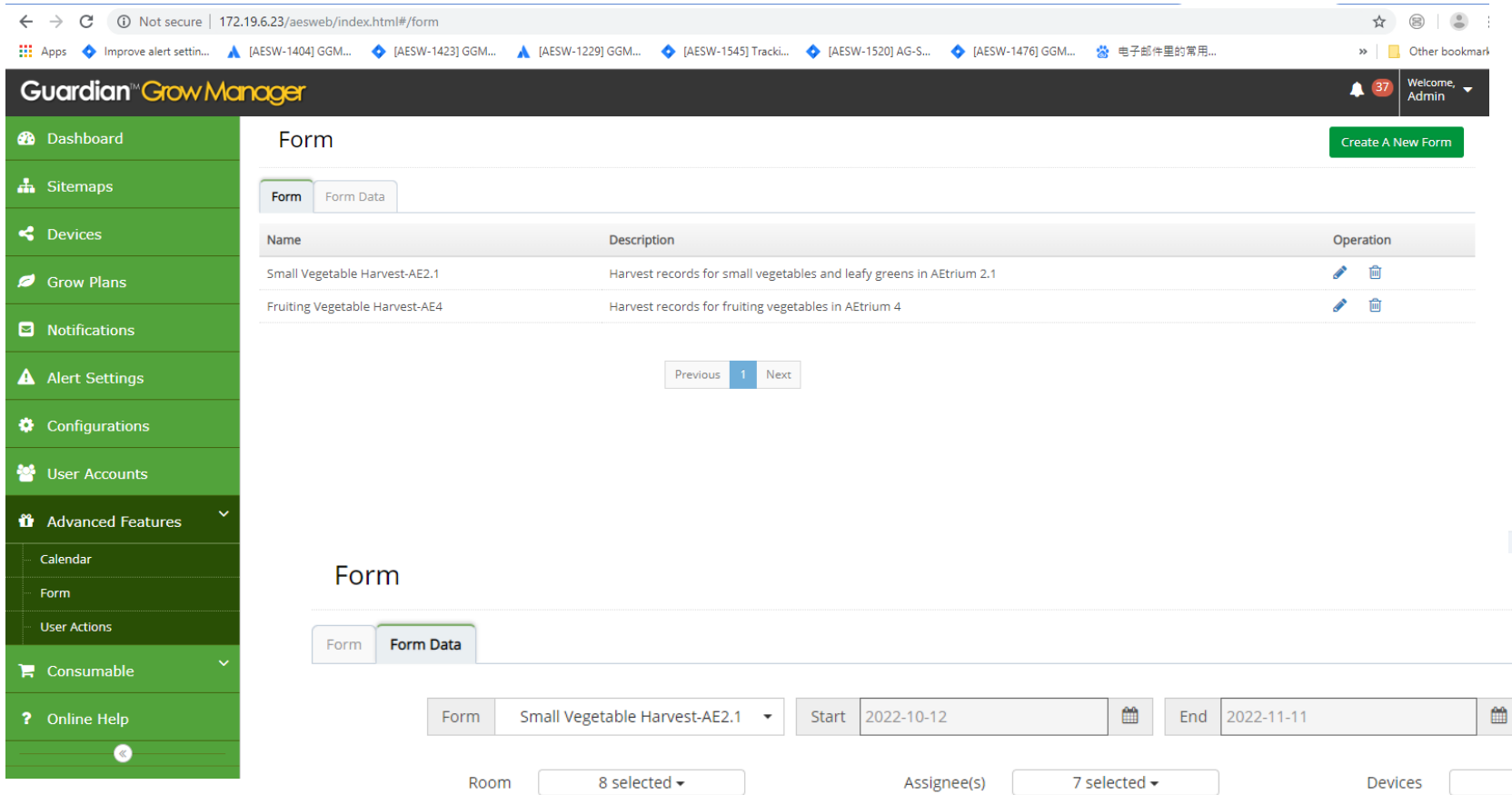

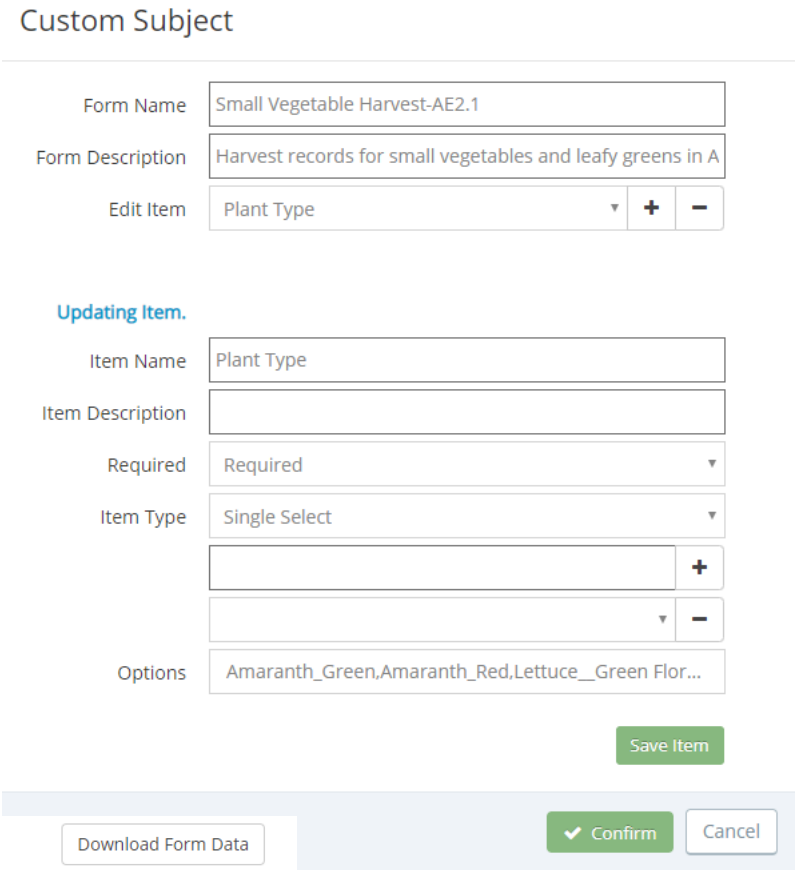

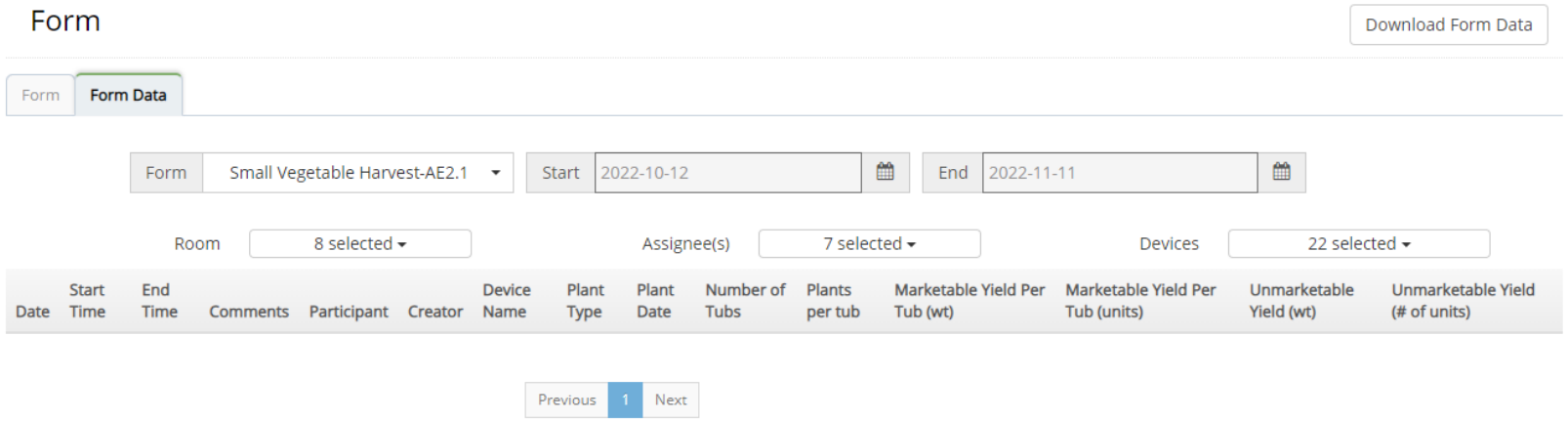

Nutrient usage integration with METRC

- **Upload nutrient usage data into METRC to meet legal requirements**

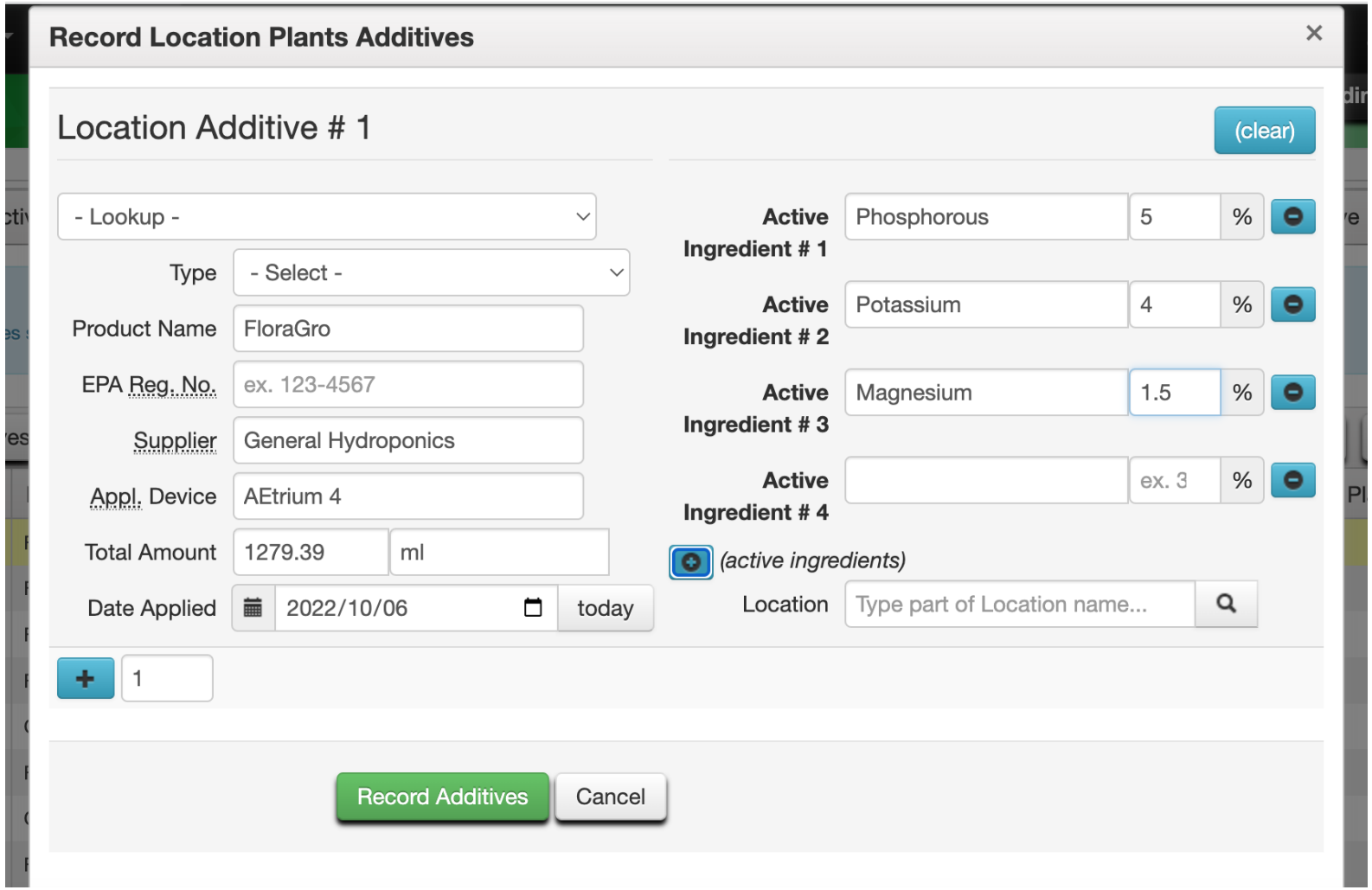

Software

Incoming GGM Improvements & Guardian Intelligence:

User Interface Improvements
Multiple sensor report
Multiple sensor with user actions report
Water usage report
Nutrient usage report
Financial report

User Interface Improvements

- **Keep improving GGM user interface and flow**

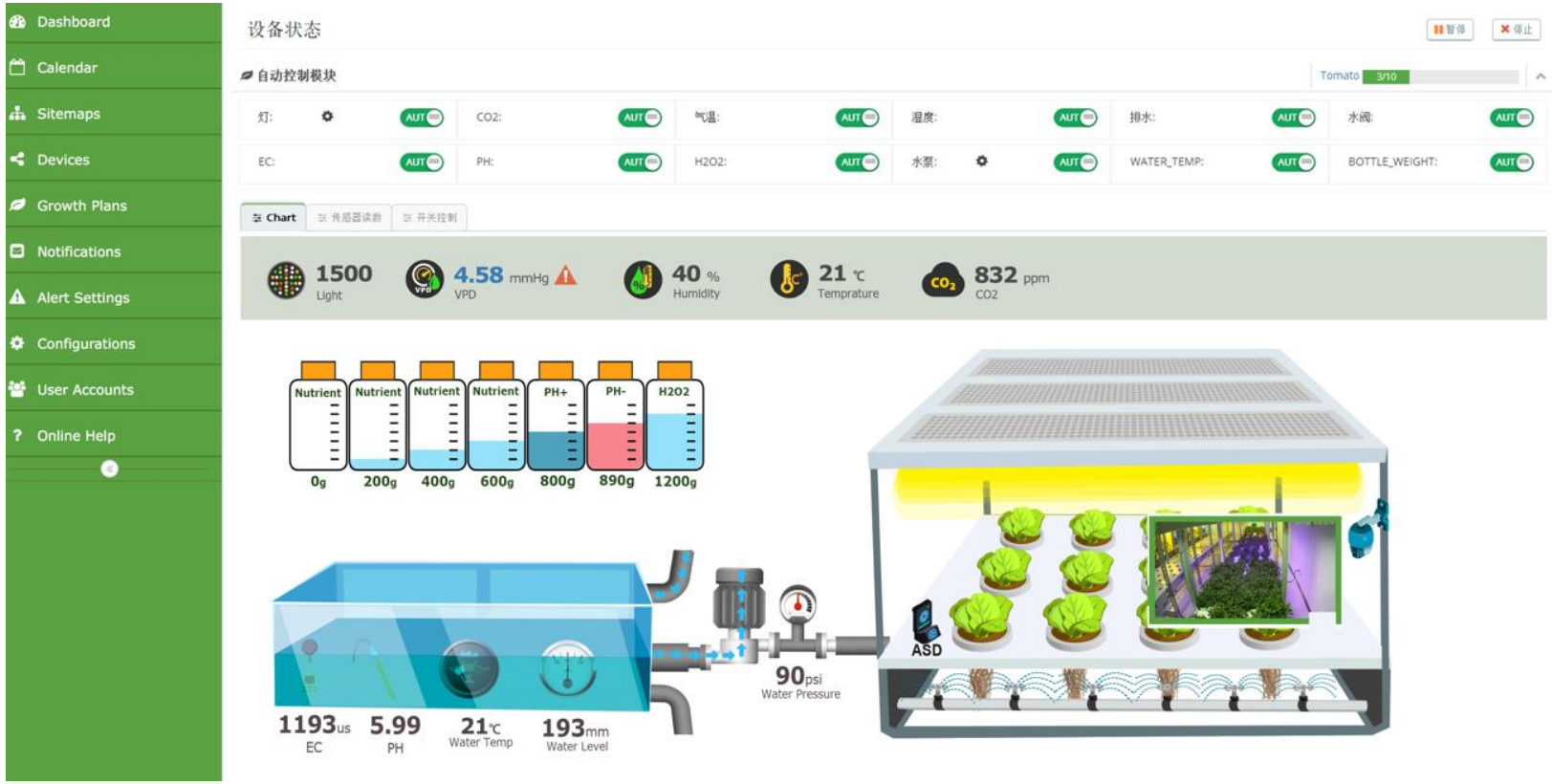

Multiple Sensor Report

- **Easy to correlate sensor and actuator data for analysis and trouble-shooting**

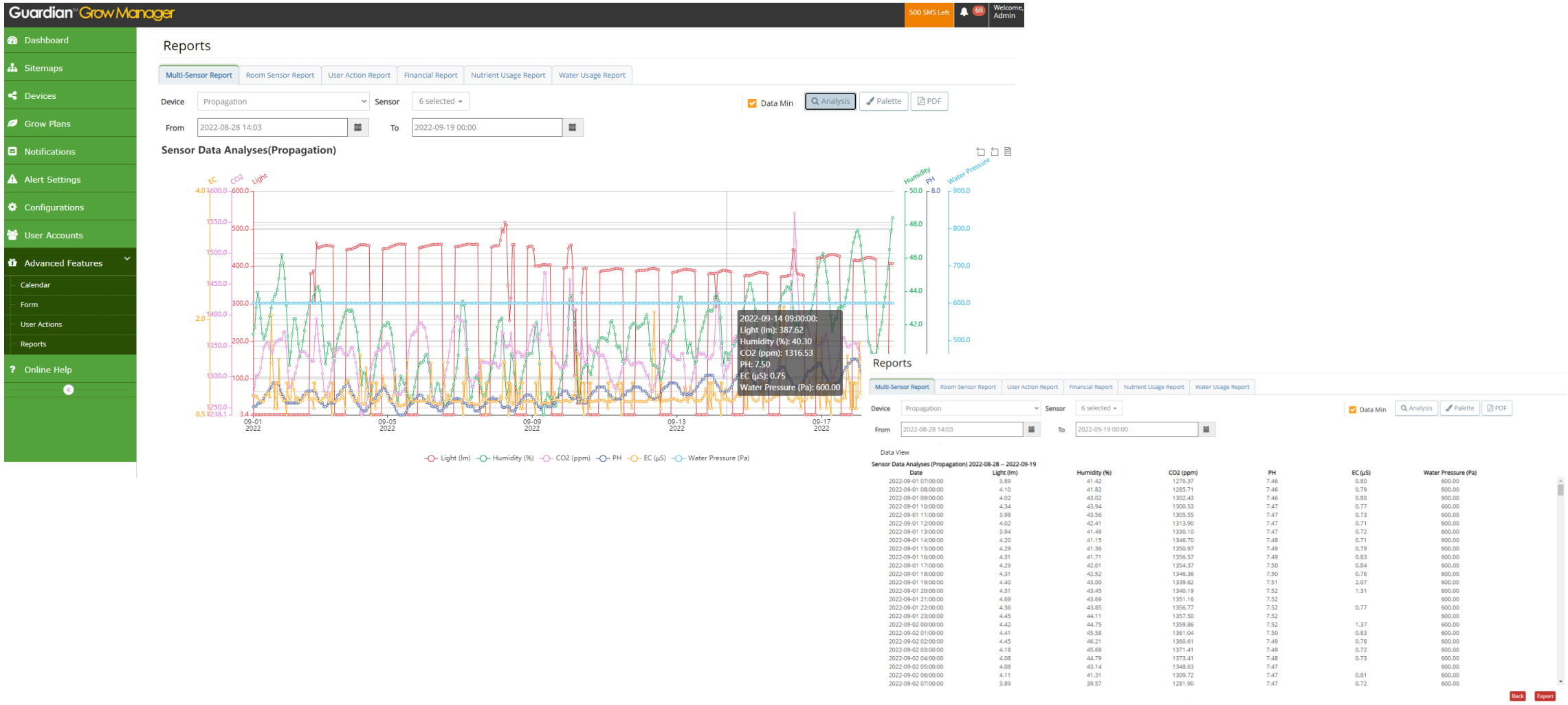

Multiple Sensor with User Actions Report

- **Easy to correlate sensor, actuator and user action data for analysis and trouble-shooting**



Water Usage Report

- **Daily water usage report for analysis and trouble-shooting**

Growth Plan(UTC + 0)	Date(UTC + 0)	Lab 1-1(10122)			Lab 1-2(10121)			Lab 1-3 (10124)		
		Water Usage(L)	Water Usage(gal)	With Drain	Water Usage(L)	Water Usage(gal)	With Drain	Water Usage(L)	Water Usage(gal)	With Drain
Cannabis Template_Lab1.2021-06-19 Cycle: Flower(Wk 1) Air Temperature(°F): Day 77 Night 75 Humidity(%): Day 60 Night 55	2021-07-01 0:00:00	68.07	17.98219485		71.13	18.79056147		59.92	15.82919223	
	2021-07-02 0:00:00	67.28	17.77349889		69.63	18.39430332		57.67	15.23480501	
	2021-07-03 0:00:00	64.32	16.99154947		65.14	17.20817059		58.44	15.43821752	
	2021-07-04 0:00:00	57.58	15.21102952		65.15	17.21081232		62.16	16.42093774	
	2021-07-05 0:00:00	73.2	19.33739772	Yes	63.59	16.79870384	Yes	62.87	16.60849993	Yes
Cannabis Template_Lab1.2021-06-19 Cycle: Flower(Wk 2) Air Temperature(°F): Day 77 Night 75 Humidity(%): Day 60 Night 55	2021-07-06 0:00:00	57.58	15.21102952		63.65	16.81455417		68.93	18.20938285	
	2021-07-07 0:00:00	63.57	16.7934204		76.37	20.17482328		70.41	18.60035756	
	2021-07-08 0:00:00	66.56	17.58329498		73.36	19.37966526		71.14	18.79320319	
	2021-07-09 0:00:00	68.81	18.1776822		78.6	20.76392706		70.38	18.5924324	
	2021-07-10 0:00:00	69.55	18.37316956		77.85	20.56579799		75.66	19.98726109	
	2021-07-11 0:00:00	65.06	17.18703683		81.62	21.5617268		77.15	20.38087752	
	2021-07-12 0:00:00	63.46	16.76436147	Yes	77.69	20.52353045	Yes	80.81	21.3477474	Yes
Cannabis Template_Lab1.2021-06-19 Cycle: Flower(Wk 3) Air Temperature(°F): Day 77 Night 75 Humidity(%): Day 55 Night 55	2021-07-13 0:00:00	59.09	15.60992939		65.89	17.40629967		72.68	19.20002823	
	2021-07-14 0:00:00	63.57	16.7934204		71.87	18.98604883		67.39	17.80255782	
	2021-07-15 0:00:00	62.08	16.39980397		74.85	19.77328169		73.41	19.39287386	
	2021-07-16 0:00:00	68.07	17.98219485		76.6	20.23558286	Yes	74.91	19.78913201	
	2021-07-17 0:00:00	76.29	20.15368951		78.63	20.77185222		77.15	20.38087752	
	2021-07-18 0:00:00	72.54	19.16304413		77.89	20.57636487		77.13	20.37559407	
	2021-07-19 0:00:00	81.39	21.50096722	Yes	78.55	20.75071846	Yes	73.31	19.36645665	Yes
Cannabis Template_Lab1.2021-06-19 Cycle: Flower(Wk 4) Air Temperature(°F): Day 77 Night 75 Humidity(%): Day 55 Night 55	2021-07-20 0:00:00	74.79	19.75743136		70.37	18.58979068		78.62	20.7692105	
	2021-07-21 0:00:00	71.79	18.96491506		78.58	20.75864362		86.15	22.75842642	
	2021-07-22 0:00:00	77.77	20.54466422		76.4	20.18274844		83.14	21.96326839	
	2021-07-23 0:00:00	76.99	20.33860998		77.12	20.37295235		86.14	22.75578469	
	2021-07-24 0:00:00	78.52	20.74279329		75.61	19.97405248		82.4	21.76778104	
	2021-07-25 0:00:00	80.77	21.33718052		73.36	19.37966526		78.63	20.77185222	
	2021-07-26 0:00:00	70.24	18.5554483	Yes	78.52	20.74279329	Yes	86.04	22.72936748	Yes
Cannabis Template_Lab1.2021-06-19 Cycle: Flower(Wk 5) Air Temperature(°F): Day 77 Night 75 Humidity(%): Day 55 Night 55	2021-07-27 0:00:00	68.78	18.16975704		72.63	19.18681962		83.16	21.96855184	
	2021-07-28 0:00:00	74.78	19.75478964		73.38	19.3849487		84.64	22.35952654	
	2021-07-29 0:00:00	71.79	18.96491506		70.38	18.5924324		71.15	18.79584492	
	2021-07-30 0:00:00	71.78	18.96227334		71.13	18.79056147		77.9	20.57900659	
	2021-07-31 0:00:00	71.78	18.96227334		71.13	18.79056147		78.64	20.77449394	

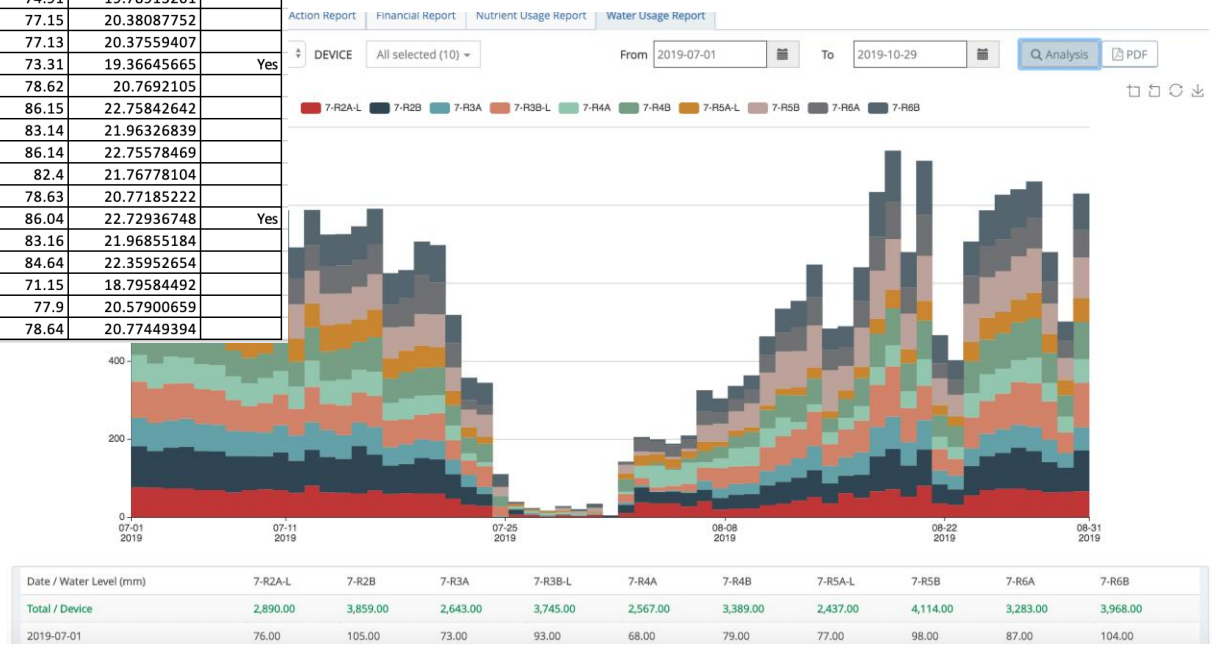

Date / Water Level (mm)	7-R2A-L	7-R2B	7-R3A	7-R3B-L	7-R4A	7-R4B	7-R5A-L	7-R5B	7-R6A	7-R6B
Total / Device	2,890.00	3,859.00	2,643.00	3,745.00	2,567.00	3,389.00	2,437.00	4,114.00	3,283.00	3,968.00
2019-07-01	76.00	105.00	73.00	93.00	68.00	79.00	77.00	98.00	87.00	104.00

Nutrient Usage Report

- **Daily nutrient usage report for analysis and trouble-shooting**

	Room	Device	Bottle #	Total Amount	Unit	Dosing Time	Unit
2	Clone Room	Cloner 1	1	44	ml	330	s
3	Clone Room	Cloner 1	2	60.67	ml	455	s
4	Clone Room	Cloner 1	3	71.33	ml	535	s
5	Clone Room	Cloner 1	4	22.67	ml	170	s
6	Flower Room 1	AE4 Row 1-1	1	171.33	ml	1285	s
7	Flower Room 1	AE4 Row 1-1	2	188	ml	1410	s
8	Flower Room 1	AE4 Row 1-1	3	145.33	ml	1090	s
9	Flower Room 1	AE4 Row 1-1	4	64	ml	480	s
10	Flower Room 1	AE4 Row 1-2	1	164	ml	1230	s
11	Flower Room 1	AE4 Row 1-2	2	209.33	ml	1570	s
12	Flower Room 1	AE4 Row 1-2	3	26.67	ml	200	s
13	Flower Room 1	AE4 Row 1-2	4	118	ml	885	s
14	Flower Room 2	AE4 Row 2-3	1	48	ml	360	s
15	Flower Room 2	AE4 Row 2-3	2	49.33	ml	370	s
16	Flower Room 2	AE4 Row 2-3	3	74	ml	555	s
17	Flower Room 2	AE4 Row 2-3	4	24	ml	180	s
18	Flower Room 2	AE4 Row 2-4	1	32	ml	240	s
19	Flower Room 2	AE4 Row 2-4	2	39.33	ml	295	s
20	Flower Room 2	AE4 Row 2-4	3	56.67	ml	425	s
21	Flower Room 2	AE4 Row 2-4	4	18.67	ml	140	s
22	Flower Room 2	AE4 Row 2-5	1	38.67	ml	290	s
23	Flower Room 2	AE4 Row 2-5	2	32	ml	240	s
24	Flower Room 2	AE4 Row 2-5	3	48	ml	360	s
25	Flower Room 2	AE4 Row 2-5	4	45.33	ml	340	s

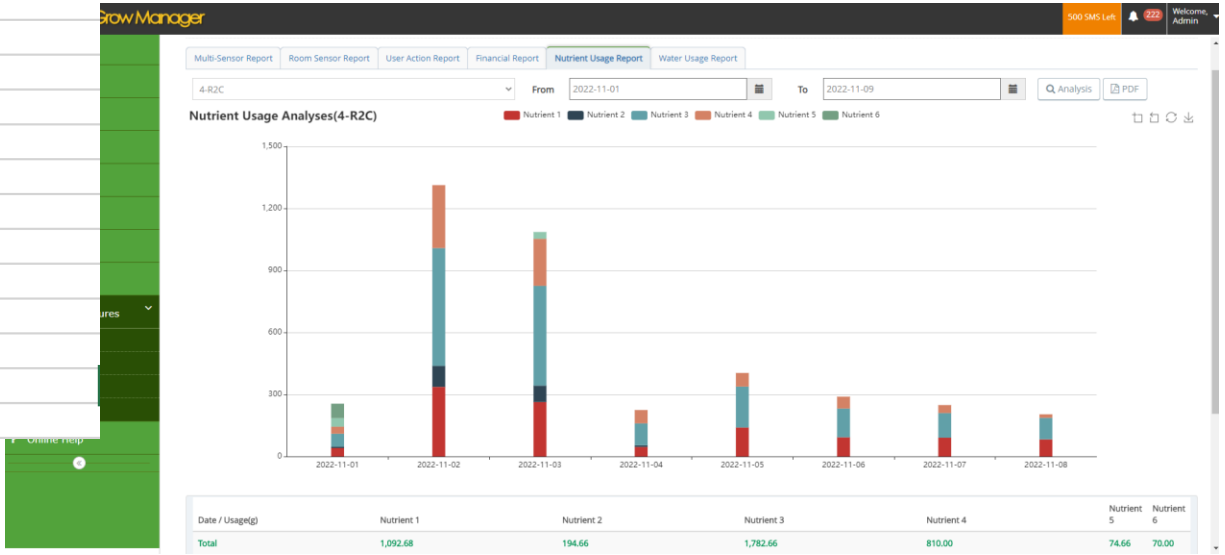

Financial Report

- **Operational data analysis to help plan and grow our business**

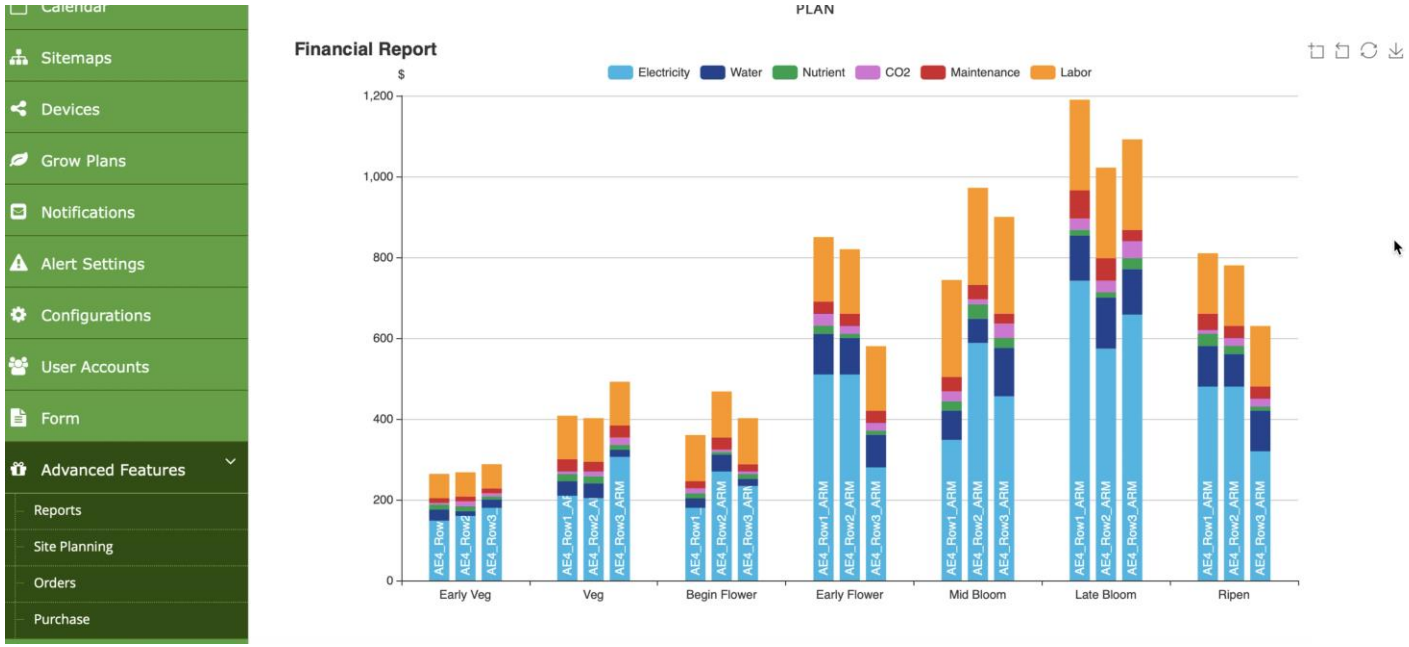

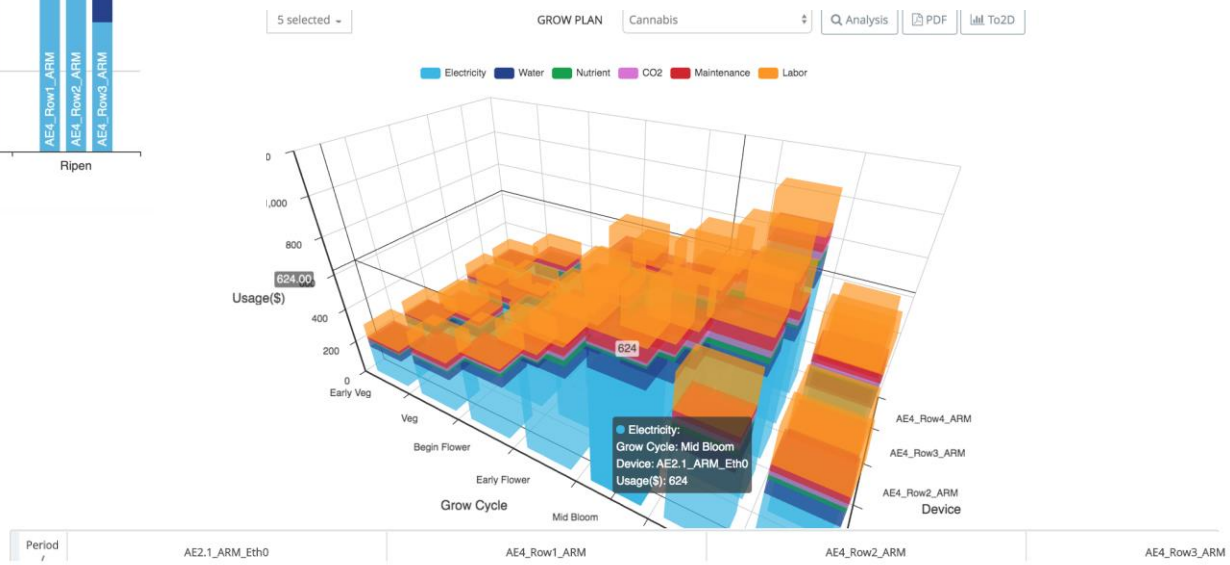

We have our prototype on the business reporting metrics on profitability if you would like to talk to us about that development!

Let’s work together to keep our business successful!

AEtrium-4 Lids

- Net pots tend to tip over
- Paint comes off
- Build up of nutrients around the net pot/flange interface

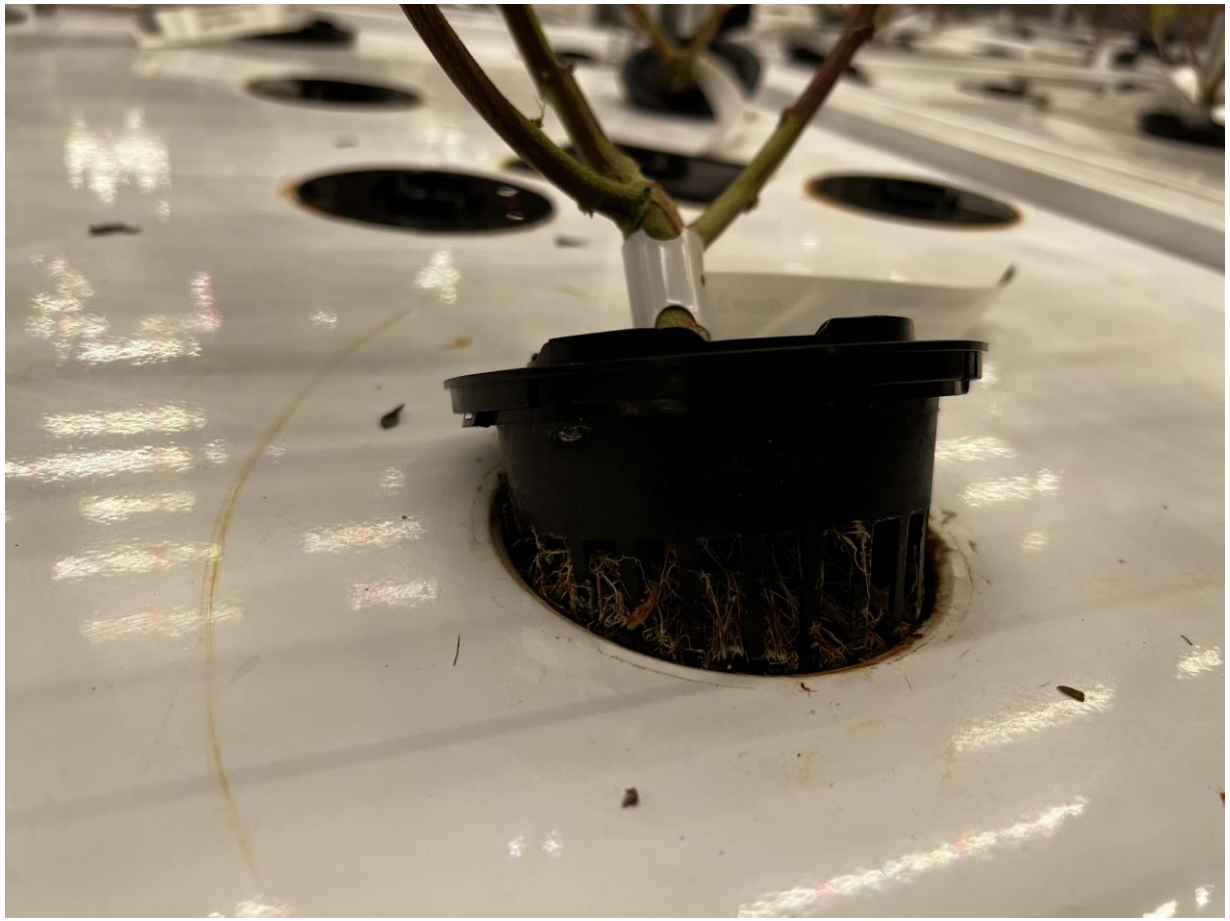

FOR AESSENSE INTERNAL USE ONLY

New Lid

Two pieces make it less unwieldly to move around

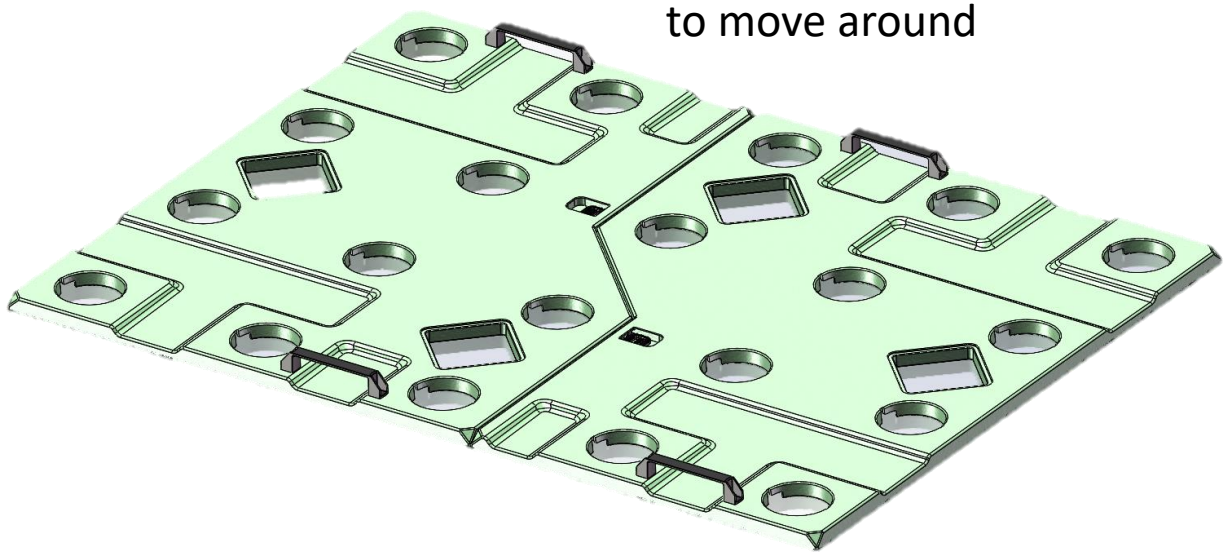

Square holes will be selected based upon usage (they won't all be there)

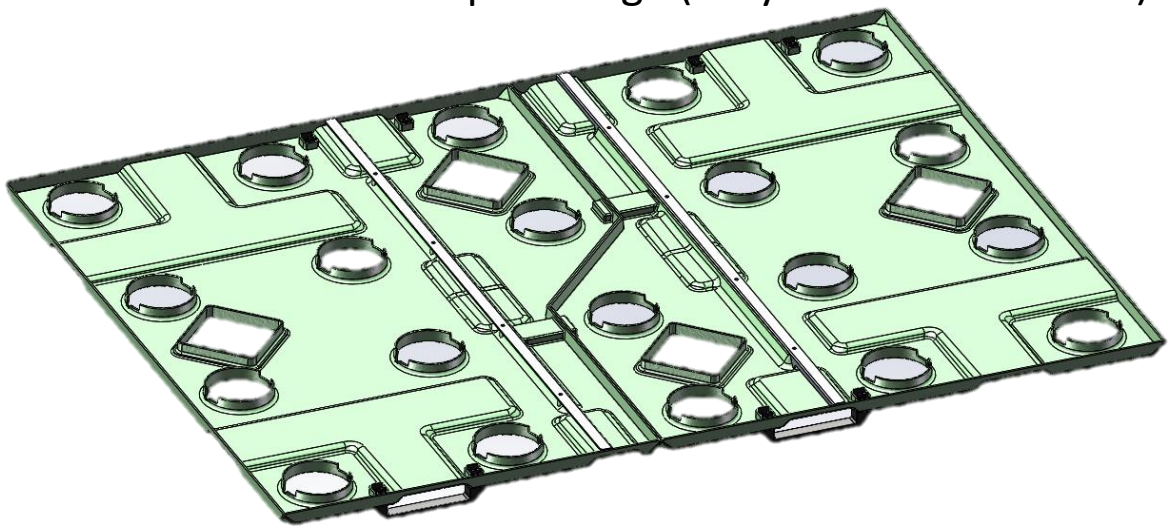

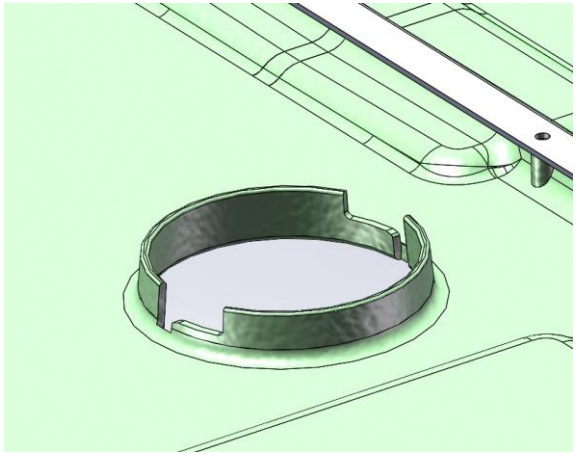

Flange helps to prevent buildup of nutrients on the top of the tray

Net pot positively locks into the tray with a twist

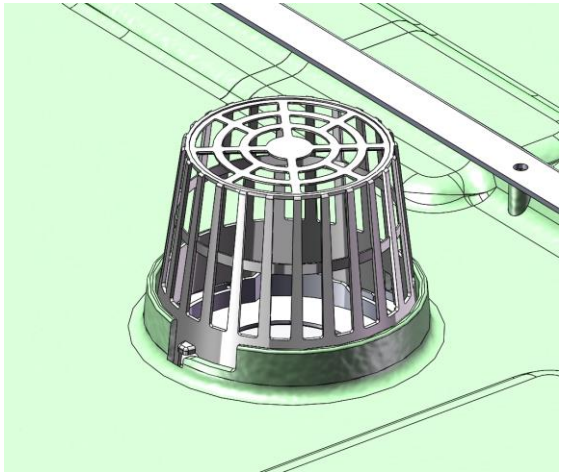

FOR AESSENSE INTERNAL USE ONLY

New Lid Early Prototype

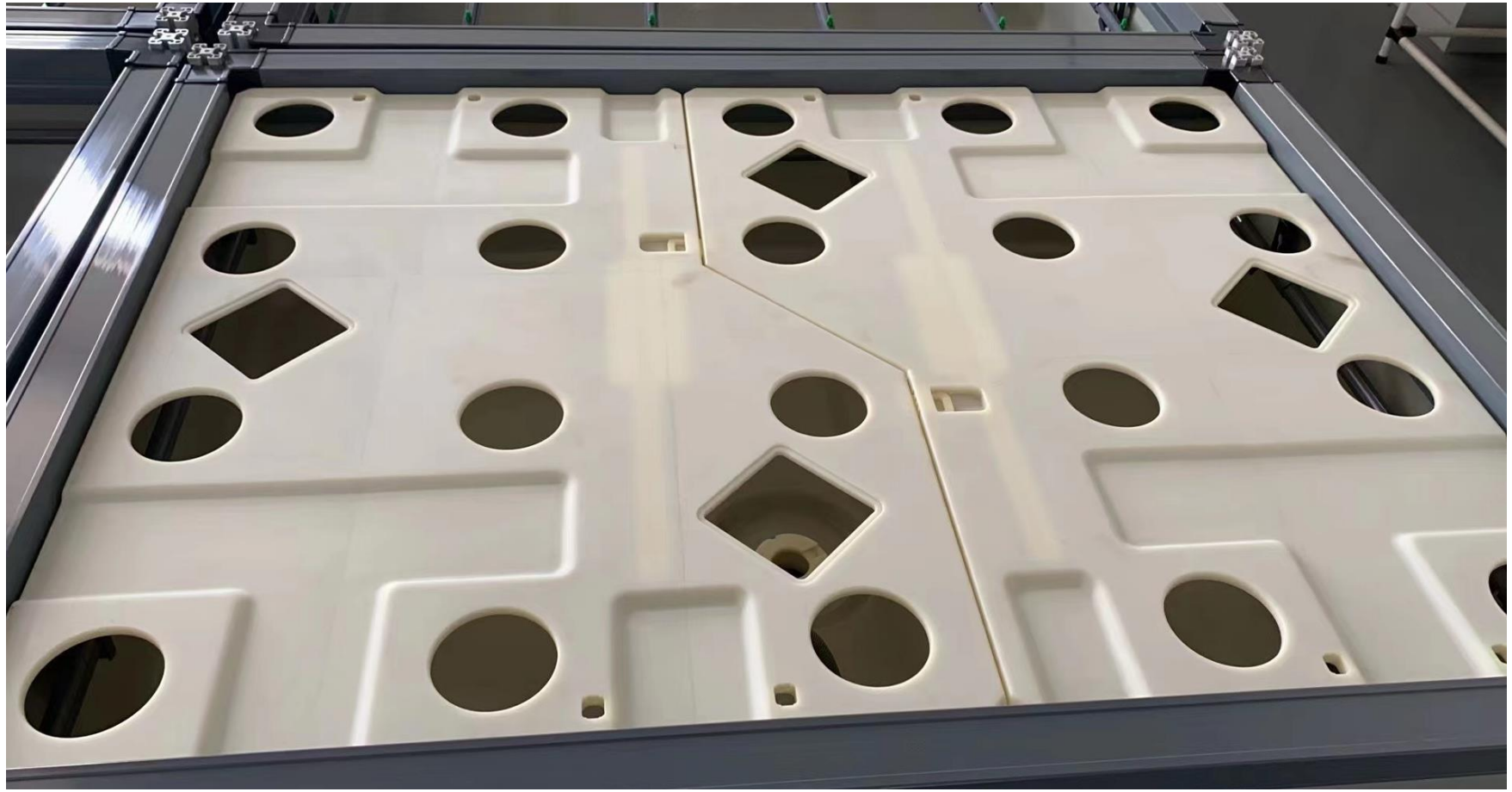

FOR AESSENSE INTERNAL USE ONLY

Optimized 8020 Coming in the Future



FOR AESSENSE INTERNAL USE ONLY

Agenda

1. Sign in/light breakfast: 8:30-9:00
2. Introductions: 9:00-9:30
    - Chris Wrenn (VP Americas Sales, meeting moderator) welcome
    - Bob Chen (CEO/President): opening remarks
    - AEssense Support Team introductions
3. User introductions: 9:30-10:30
    - Company size, how many tubs/lights
    - Personal history, Industry history
    - How are you doing? Harvests/year, Yield/tub, $/lb
4. “Cleanliness is Next to Godliness” Cleaning and sanitation discussion:10:30-11:30
    - Cleanliness overview
    - AEtrium-2.1 cleaning specifics
    - AEtrium-4 cleaning specifics
        - Harvest Procedures
5. The road to cloning success in the AEtrium-2.1: 11:30-12:00
6. Working Lunch:12:00-1:00
7. AEtrium System Coming Upgrades: 12:00-12:30
    - Software
    - Hardware
    - User recommended upgrades
8. Blooming Success in the AEtrium: 12:30-1:00
    - Nutrients
    - Root health
    - Canopy management
9. Environmental controls: 1:00-1:30
    - Operational targets
    - Challenges
    - Preferred vendors
10. Closing: 1:30-2:00
    - AEssense comments
    - User comments

FOR AESSENSE INTERNAL USE ONLY

Blooming Success in the AE-4

AEssenseGrows



Overview

1. Tripod of Success
2. Blooming Roadmap
3. Cleaning and Maintaining the System



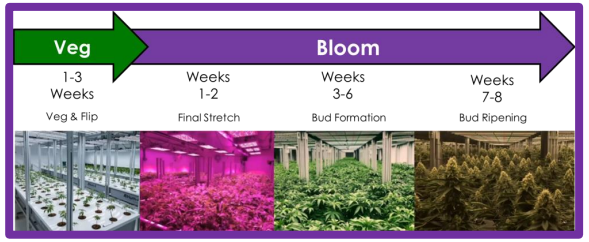



Tripod of Success

For High Quality Cannabis



Cultivation



Genetics

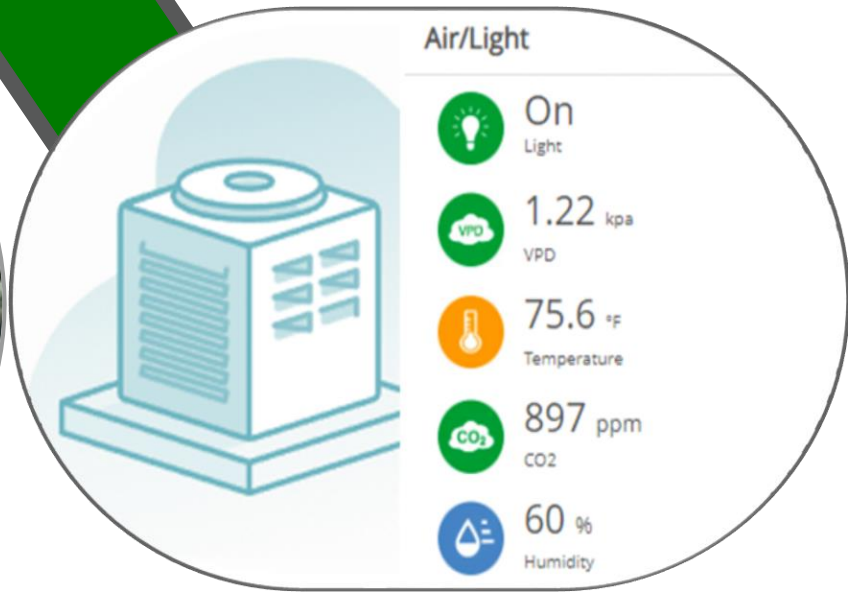

Environment

Tripod of Success - Cultivation

Cultivators ⟷ **Interdependent** ⟷ **Cultivation System**

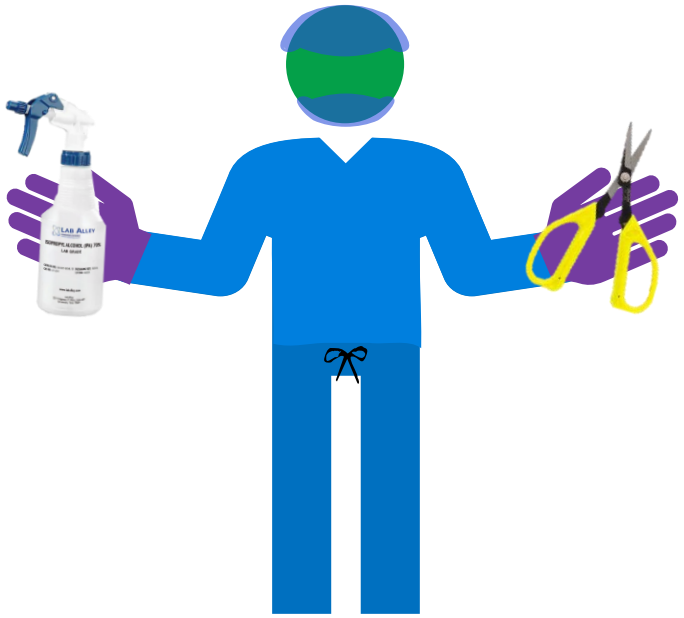

Autonomously Assisted

~~Autonomous~~



Tripod of Success - Genetics

Market demand



Ease of Production

Yield

Tripod of Success – Environment

HVAC Capacity

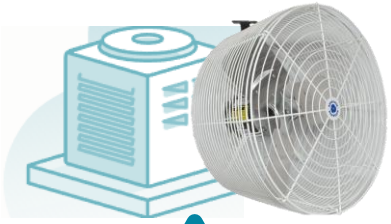



Program

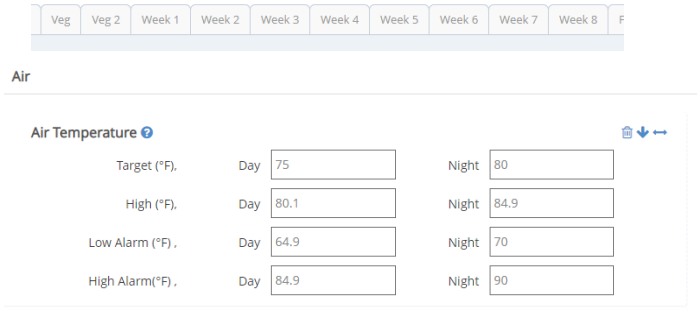

Process Qualifications

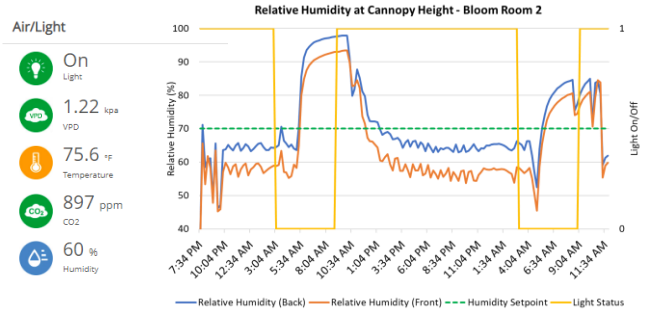

Aetrium-4 Blooming Roadmap

Veg

Bloom

1-3 Weeks	Weeks 1-2	Weeks 3-6	Weeks 7-8
Veg & Flip	Final Stretch	Bud Formation	Bud Ripening







Blooming Roadmap

Veg

1-3 Weeks

Veg & Flip

- Spacing
- Shaping (canopy management)
- Knowing when to flip







Blooming Roadmap

Bloom

Weeks
1-2

Final Stretch

- Rapid Growth
- Nutrient Transition
- Final Defoliation









Blooming Roadmap

Bloom

Weeks
3-6

Bud Formation



- Stretching Stops
- Bud & Trichome Development
- White Pistils
- Active monitoring



Blooming Roadmap

Bloom

Weeks
7-8

Bud Ripening



- Trichome opacity
- Bud fattening
- Pistil color change
- THC level climax
- Optional flush



Biofilm Formation

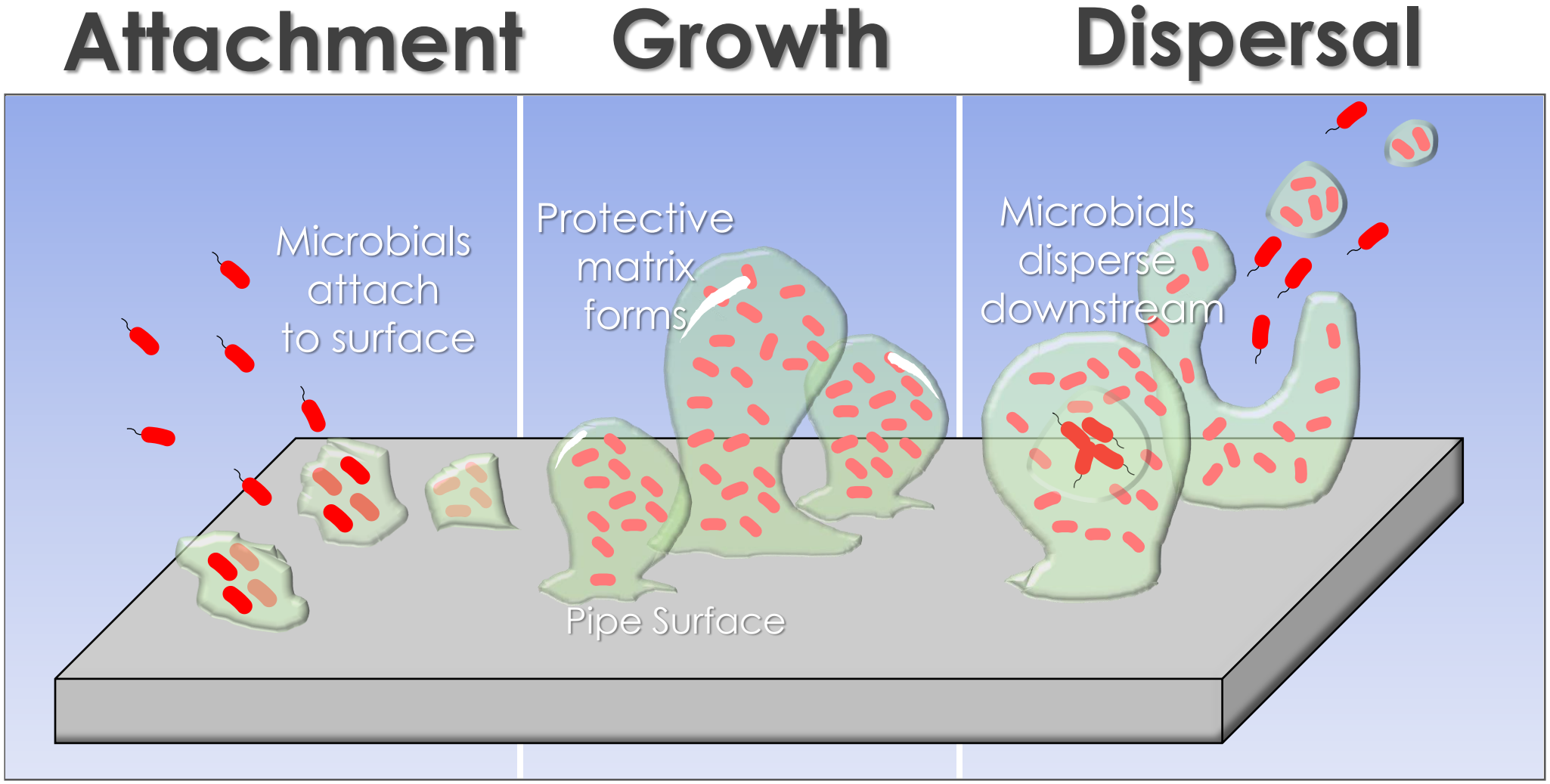

Pre Cultivation Cleaning

Cleaning

- Remove all debris
- Apply chemical cleaners

Sa

***Note**: Surfaces must be clean for sanitizers to be effective.*

- Reservoirs and Surfaces
- Irrigation Lines













Mid Cultivation Pathogen Control







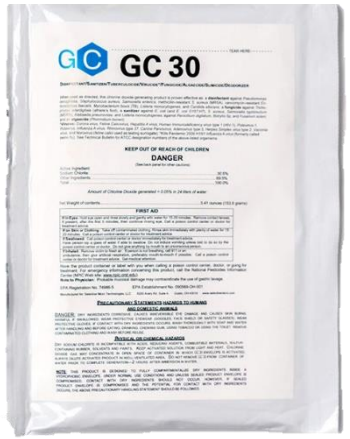

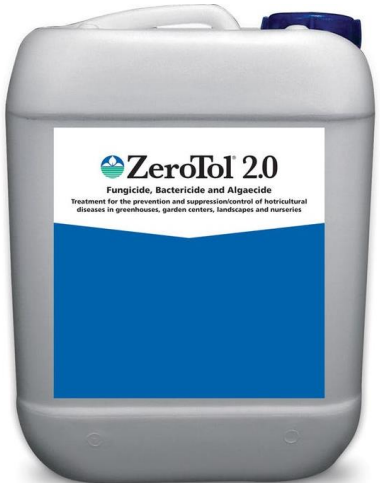

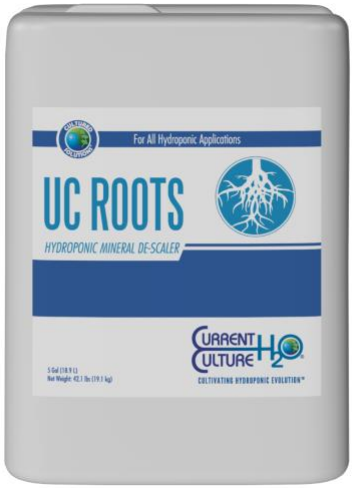

Post Harvest Pathogen Control



Tub after harvest



Reservoir right after harvest



Biofilm

Review

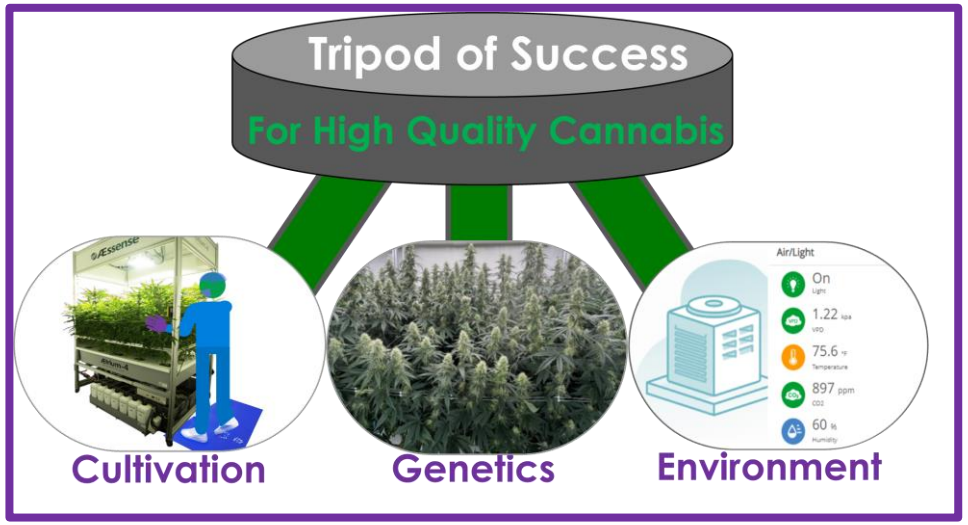
Tripod of Success
For High Quality Cannabis
Air/Light
On
1.22
75.6
897 ppm
60
Cultivation
Genetics
Environment

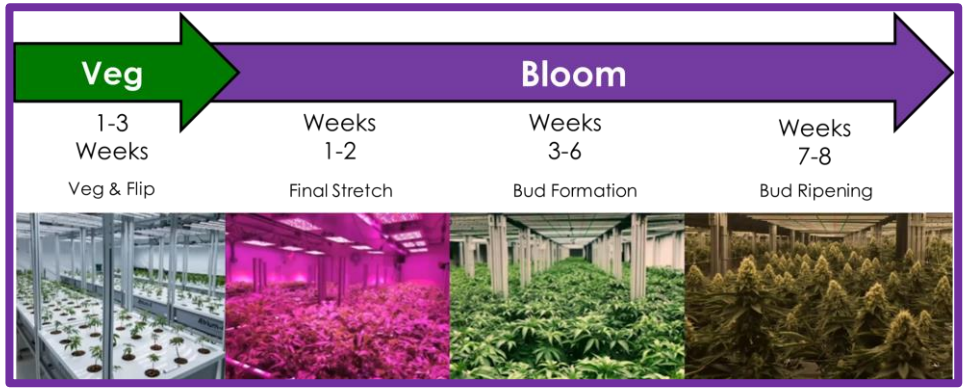
Veg
Bloom
1-3 Weeks
Veg & Flip
Weeks 1-2
Final Stretch
Weeks 3-6
Bud Formation
Weeks 7-8
Bud Ripening


Eco
GreenClean
BioFoamer
SaniDate 5.0
PORTER CABLE

Agenda

1. Sign in/light breakfast: 8:30-9:00
2. Introductions: 9:00-9:30
    - Chris Wrenn (VP Americas Sales, meeting moderator) welcome
    - Bob Chen (CEO/President): opening remarks
    - AEssense Support Team introductions
3. User introductions: 9:30-10:30
    - Company size, how many tubs/lights
    - Personal history, Industry history
    - How are you doing? Harvests/year, Yield/tub, $/lb
4. “Cleanliness is Next to Godliness” Cleaning and sanitation discussion:10:30-11:30
    - Cleanliness overview
    - AEtrium-2.1 cleaning specifics
    - AEtrium-4 cleaning specifics
        - Harvest Procedures
5. The road to cloning success in the AEtrium-2.1: 11:30-12:00
6. Working Lunch:12:00-1:00
7. AEtrium System Coming Upgrades: 12:00-12:30
    - Software
    - Hardware
    - User recommended upgrades
8. Blooming Success in the AEtrium: 12:30-1:00
    - Nutrients
    - Root health
    - Canopy management
9. Environmental controls: 1:00-1:30
    - Operational targets
    - Challenges
    - Preferred vendors
10. Closing: 1:30-2:00
    - AEssense comments
    - User comments

FOR AESSENSE INTERNAL USE ONLY

Operational Targets

- This is our generalized operational targets:

	Week	Stage	Day Temp (°F/°C)	Night Temp (°F/°C)	Day RH (%)	Night RH (%)	Photoperiod (hrs)	Reservoir Water temp (°F/°C)
Clone/veg	1	Clone 1	73/23	72/22	80	70	18	66/16
		Clone 2	73/23	72/22	80	70	18	66/16
	2	Clone 3	73/23	72/22	75	65	18	66/16
	3	Veg 1	73/23	70/21	70	60	18	66/16
	4	Veg 2	75/24	65/18	65	55	18	66/16
Flower	1	Begin Flower	78/25	65/18	65	55	12	66/16
	2	Early Flower	80/27	65/18	65	55	12	66/16
	3	Mid Bloom 1	80/27	65/18	65	55	12	66/16
	4	Mid Bloom 2	80/27	65/18	60	50	12	66/16
	5	Mid Bloom 3	80/27	65/18	60	50	12	66/16
	6	Late Bloom	80/27	65/18	55	50	12	66/16
	7	Ripen 1	80/27	65/18	50	50	12	66/16
	8	Ripen 2	80/27	65/18	50	50	12	66/16
		Flush	78/25	60/16	50	50	12	66/16
		Harvest	75/24	60/16	50	50	12	66/16

FOR AESSENSE INTERNAL USE ONLY

What are the Environmental Challenges?

- Humidity Control?

FOR AESSENSE INTERNAL USE ONLY

Environmental Control using AG Smart Hub

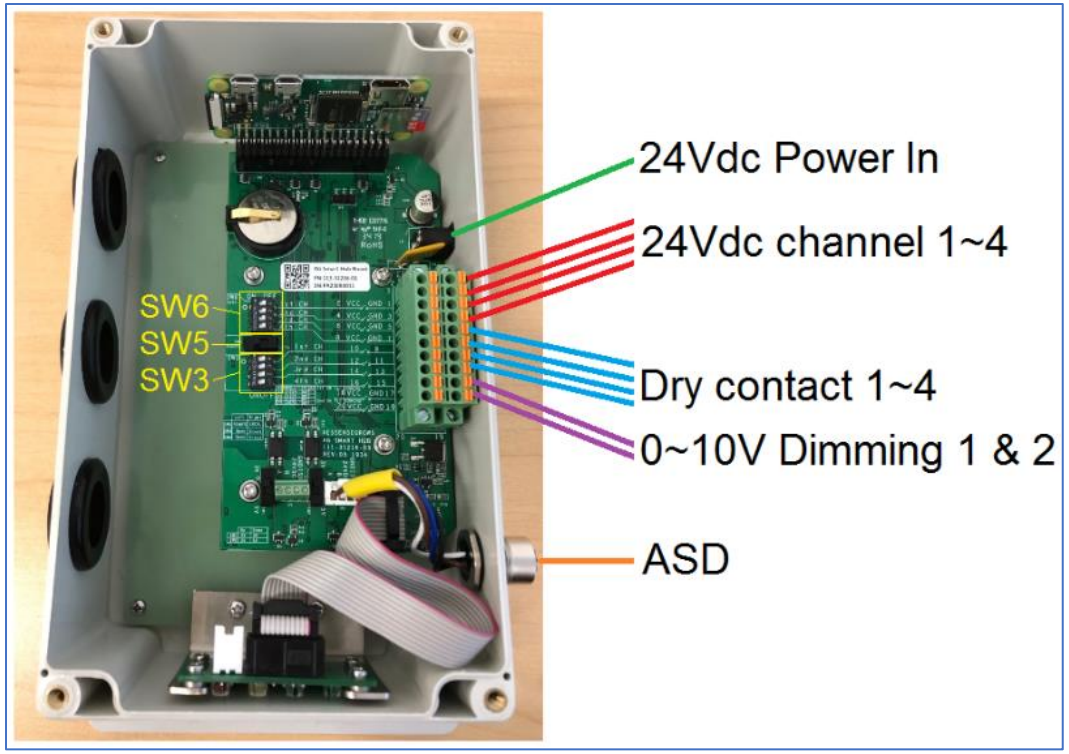

- 4 channels of 24Vdc output (100mA)
- 4 channels of dry contact
- 2 channels of 0~10V dimming
- 2 channels of RS485 (one for ASD)
- Integrated with AEtrium System

Device Types

- Fan coil/Air handler
- Fan coil with fan speed control
- Dehumidifier
- Humidifier
- Ventilator

- Damper
- CO_2 regulator with Basic Relay
- Contactor for lights on/off
- Dimming for daisy-chained lights
- Fan for air circulation

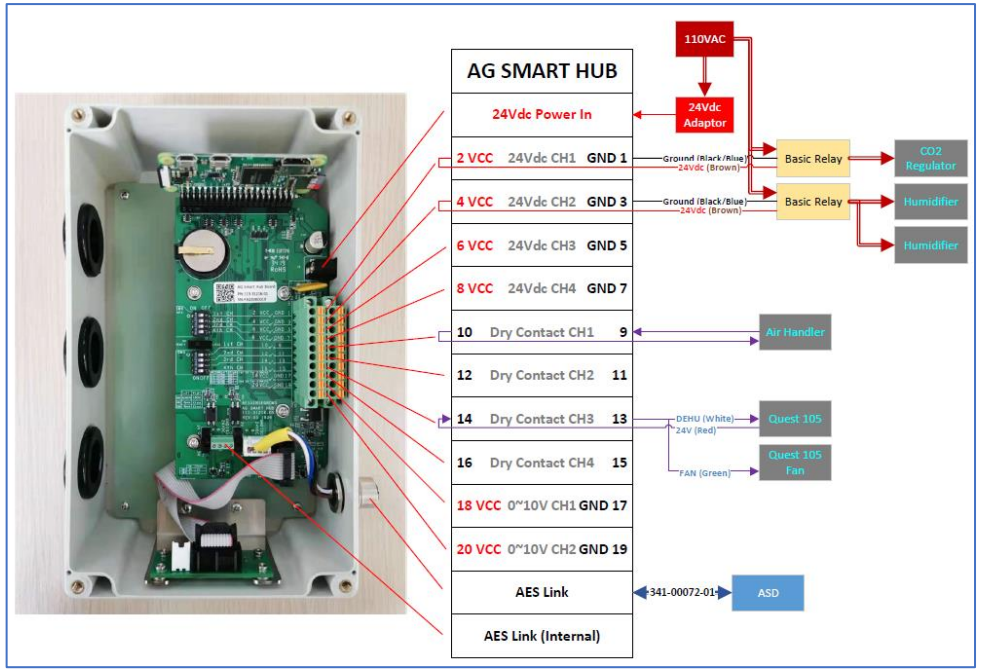

Thoughts on Preferred Vendors?

FOR AESSENSE INTERNAL USE ONLY

Agenda

1. Sign in/light breakfast: 8:30-9:00
2. Introductions: 9:00-9:30
    - Chris Wrenn (VP Americas Sales, meeting moderator) welcome
    - Bob Chen (CEO/President): opening remarks
    - AEssense Support Team introductions
3. User introductions: 9:30-10:30
    - Company size, how many tubs/lights
    - Personal history, Industry history
    - How are you doing? Harvests/year, Yield/tub, $/lb
4. “Cleanliness is Next to Godliness” Cleaning and sanitation discussion:10:30-11:30
    - Cleanliness overview
    - AEtrium-2.1 cleaning specifics
    - AEtrium-4 cleaning specifics
        - Harvest Procedures
5. The road to cloning success in the AEtrium-2.1: 11:30-12:00
6. Working Lunch:12:00-1:00
7. AEtrium System Coming Upgrades: 12:00-12:30
    - Software
    - Hardware
    - User recommended upgrades
8. Blooming Success in the AEtrium: 12:30-1:00
    - Nutrients
    - Root health
    - Canopy management
9. Environmental controls: 1:00-1:30
    - Operational targets
    - Challenges
    - Preferred vendors
10. Closing: 1:30-2:00
    - AEssense comments
    - User comments

FOR AESSENSE INTERNAL USE ONLY

Thank You!

FOR AESSENSE INTERNAL USE ONLY